VOLVO

Service Manual

Fault tracing
Design
Repair
Function
Maintenance

Section 3 (36)

Anti-theft alarm;
Guard Alarm II
940/960 1993-

Basic model
960 1995-

TP 3601201

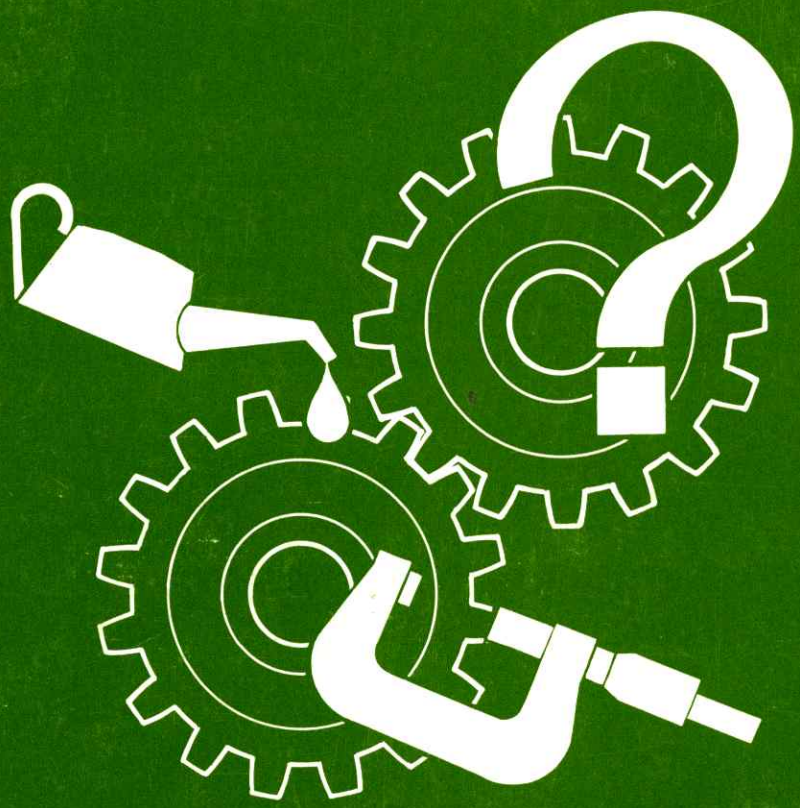

Volvo Car Corporation

Cars with SRS

Warning
Cars equipped with a Supplemental Restraint System (SRS) must be treated extra carefully when repairs are being made. This is to help prevent:
1. Injuries when carrying out a repair. 2. Damage or malfunction of the SRS system. Repair to either the SRS itself or a related system or component must be carried out by an authorized Volvo workshop. Refer to the appropriate SRS service manual for complete system information.

Is the car equipped with SRS?
Cars with SRS are most easily recognized by the SRS letters on the steering wheel pad. If the car is also equipped with an air bag on the passenger side, the letters 'SRS' will be embossed on the instrument panel above the glove compartment. Most cars with SRS are also equipped with pyrotechnical seat belt tensioners in the B-posts.

Dashboard or around steering column
Take care to avoid electric wiring being pinched, frayed or pierced by screws when working on firewall, knee bolster, ignition switch, steering column casings, glove compartment, instrument panel, door sills and B-posts.

Driver's seat, center console or carpeting at left front seat
The SRS collision sensor is located under the left front seat. Do not disconnect the collision sensor connector. Never install accessories on or near the sensor. The crash sensor connector on 1992 and earlier models must **never** be disconnected.

Repairs to steering gear and column
When carrying out repairs to the steering wheel, steering gear or column always follow the repair procedures given in the appropriate SRS service manual. The contact reel in the steering column will be damaged if the steering wheel is turned more than three turns in either direction.

Test terminal
- 1992 : An unused terminal in the fusebox is used as a hook-up for SRS diagnostics. Do not install a fuse or connect an accessory to this terminal.
1993 - : Diagnostic unit B in the engine compartment is used for fault tracing purposes.

Modifications to May 1994 included

Modifications introduced after the above date are not covered in this manual.
See Service Bulletins as applicable.

Volvos are sold in versions adapted for different markets. These adaptations depend on many factors including legal, taxation and market requirements. This manual may therefore show illustrations and text which do not apply to cars in your country.
Volvo owners planning to export their car(s) to another country should investigate the applicable safety and exhaust emission requirements. In some cases it may be impossible to comply with these requirements.

© Volvo Car Corporation

Contents

	Page
Important information	2
Special equipment	3

Design and function

Introduction	4
Components	7
Alarm components in the car	9
Basic alarm components	11
Guard Alarm II components	15
Basic alarm functions	23
Guard Alarm II functions	24

Fault tracing

	Step	
Organisation of fault tracing	AA	29
To be observed when fault tracing on alarm system	AB	30
Symbols	AC	33
No alarm when door is opened	B	34
No alarm on hood	C	39
No alarm on trunk lid	D	46
No alarm when sensor activated (only Guard Alarm II)	E	51
False alarm	F	54
No horn when alarm triggered	G	56
No visual signal when alarm triggered	H	59
Start inhibitor not functioning	J	62
Start inhibitor will not disengage	K	64
Indicator LED faulty	L	65
Basic alarm cannot be activated or deactivated	M	68
Guard Alarm II cannot be activated or deactivated	N	79
Fault tracing on alarm wiring	P	86
Programming and testing of control module (only Guard Alarm II)	Q	90
Other electrical fault tracing	R	96
Circuit diagram; accessory wiring Guard Alarm II		100
Circuit diagram; Wiring run for anti-theft alarm 940 1993-		102
Circuit diagram; Wiring run for anti-theft alarm 960 1993		104
Circuit diagram; Wiring run for anti-theft alarm 960 1994		106
Circuit diagram; Guard Alarm II 960 1995-		108
Circuit diagram; Basic alarm 960 1995-		110

Order number: TP 3601201

We reserve the right to make alterations without prior notification.

Important information

Note: The service manual is written mainly for the left hand drive version of the Volvo 960 1995-.

This book describes two different versions of the anti-theft alarm:

- Basic Alarm
- Guard Alarm II

3600505A

Volvo 960 1995-

The Volvo 960 1995- is equipped with an advanced central locking system (similar to that used in the Volvo 850).

The **basic alarm** functions only in conjunction with this central locking system.

The relay distribution box is equipped with bases (items C and F) for direct connection to the basic alarm control module.

Connections are made in the same way for **Guard Alarm II.**

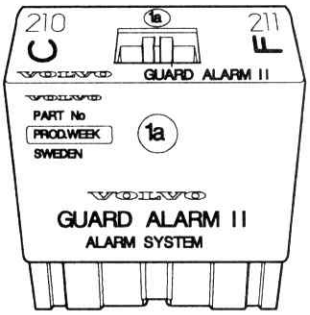

3600315A

Volvo 940 1993- and 960 1993-1994

Guard Alarm II can also be installed in the 940 1993- and 960 1993-1994 models with additional wiring. When fault tracing, it is therefore important to distinguish the control module relay bases.

The relay bases for the alarm control module

The illustration shows the relay bases.

The violet base (VO) corresponds to item C and the black base (SB) corresponds to item F of the alarm control module, which will be marked (VO) and (SB) respectively in the illustrations.

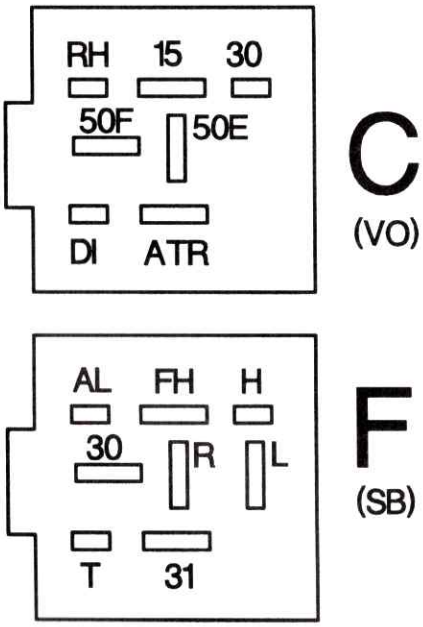

3600303A

The circuit diagram

Note: When fault tracing, if a fault is found in the wiring, make a habit of checking the current car model in the circuit diagrams at the back of the book, since there may be certain differences in the identification of connectors and such.

Special Tools

	Item - use
1399141-9	**Programming box,** re-programming and testing of Guard Alarm II control module To be plugged into 12 V cigarette lighter socket.

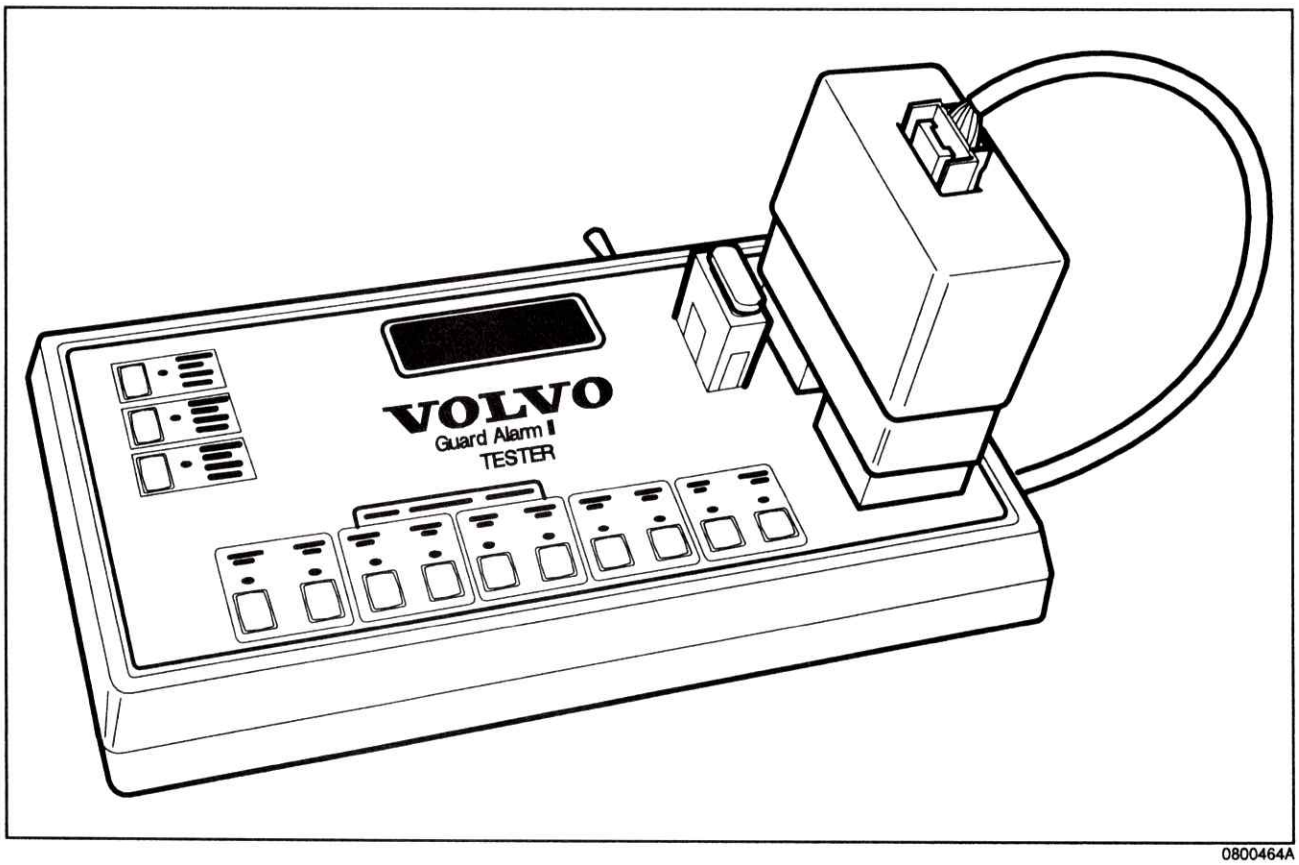

0800464A

Design and function

Introduction

The anti-theft alarm is found in two different versions:

- The basic alarm
- Guard Alarm II

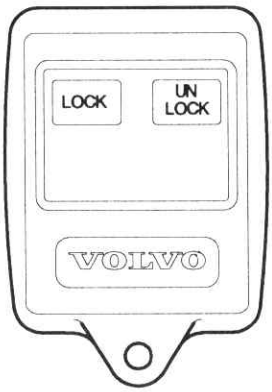

8300421A

The basic alarm

The illustration shows the remote control for central locking.

The alarm is operated either by means of the door key in the driver's door or by means of the central locking remote control.

The central locking relay transmits signals to the alarm's control module.

Note: In some markets the door key mode may be disconnected.

3600310A

Guard Alarm II

The illustration shows the remote control for the anti-theft device Guard Alarm II.

The alarm is operated by a separate radio-controlled handset.

Note: Guard Alarm II cannot be operated by means of the ordinary door key.

Identifying the different versions

The easiest way to identify the different versions is by means of the remote controls above.

Anti-theft alarm, general

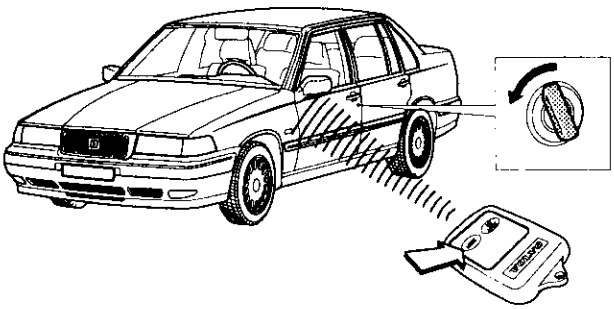

3600302A

Functions affecting only the basic alarm:

Activation and deactivation

Activation and deactivation by means of the central locking remote or with the door key in the driver's door (not in all markets).

Functions affecting both the basic alarm and Guard Alarm II:

Car doors

The car doors are protected by standard door contacts.

Hood

The hood is protected by a contact next to the left hand catch.

Trunk

The trunk is protected by the catch.

Start inhibitor

The start inhibitor prevents the engine being started after the alarm has been triggered, e.g. by hot-wiring.

Alarm

Alarm is given either by means of the car's turn signals and separate horn, or by means of a siren with battery back-up.

Indication

Indication is given by means of an LED for activated, deactivated and triggered alarm, as also for any fault in the sensor loop.

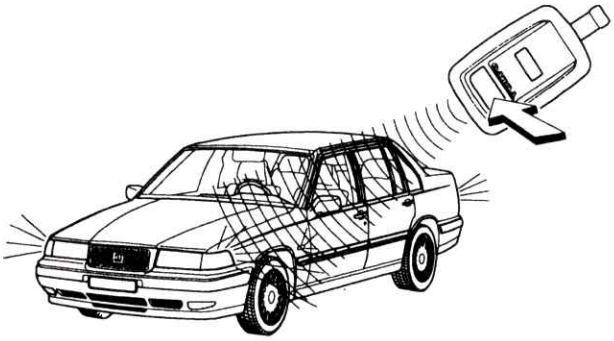

3600308A

Functions affecting only Guard Alarm II:

Acknowledgement signal

There is an acknowledgement signal from the turn signals when the alarm is activated and deactivated.

Panic function

The panic function triggers the alarm when remote control button 2 is held depressed for 3 seconds.

Service mode

The service mode is used to shut off the alarm e.g. while the car is in the workshop.

Disabling the sensor loop

The sensor loop may be disabled when there is a risk that the alarm may be triggered by the broken glass or level sensor, e.g. the level sensor on a ferry.

Activation and deactivation

Activation and deactivation are carried out by means of a separate remote control.

Programmable functions on the Guard Alarm II control unit:

Re-programming the control unit can only be carried out by means of the programming box P/N 1399141-9.

Sound signals

Sound signals can be changed from intermittent to continuous (a siren should have a continuous signal).

Panic alarm

The panic alarm should normally be in position ON.

Automatic reactivation

Automatic reactivation occurs if no door or window has been opened within two minutes after the alarm has been switched off (e.g. unintentionally).

Note: The doors are locked on reactivation.

Acknowledgement signals

Acknowledgement signals, either visual or by sound, can be changed or shut off.

Guard Alarm II can in addition be connected to:

One or more sensors, e.g. broken glass and level sensors.

Components

Basic alarm principal components

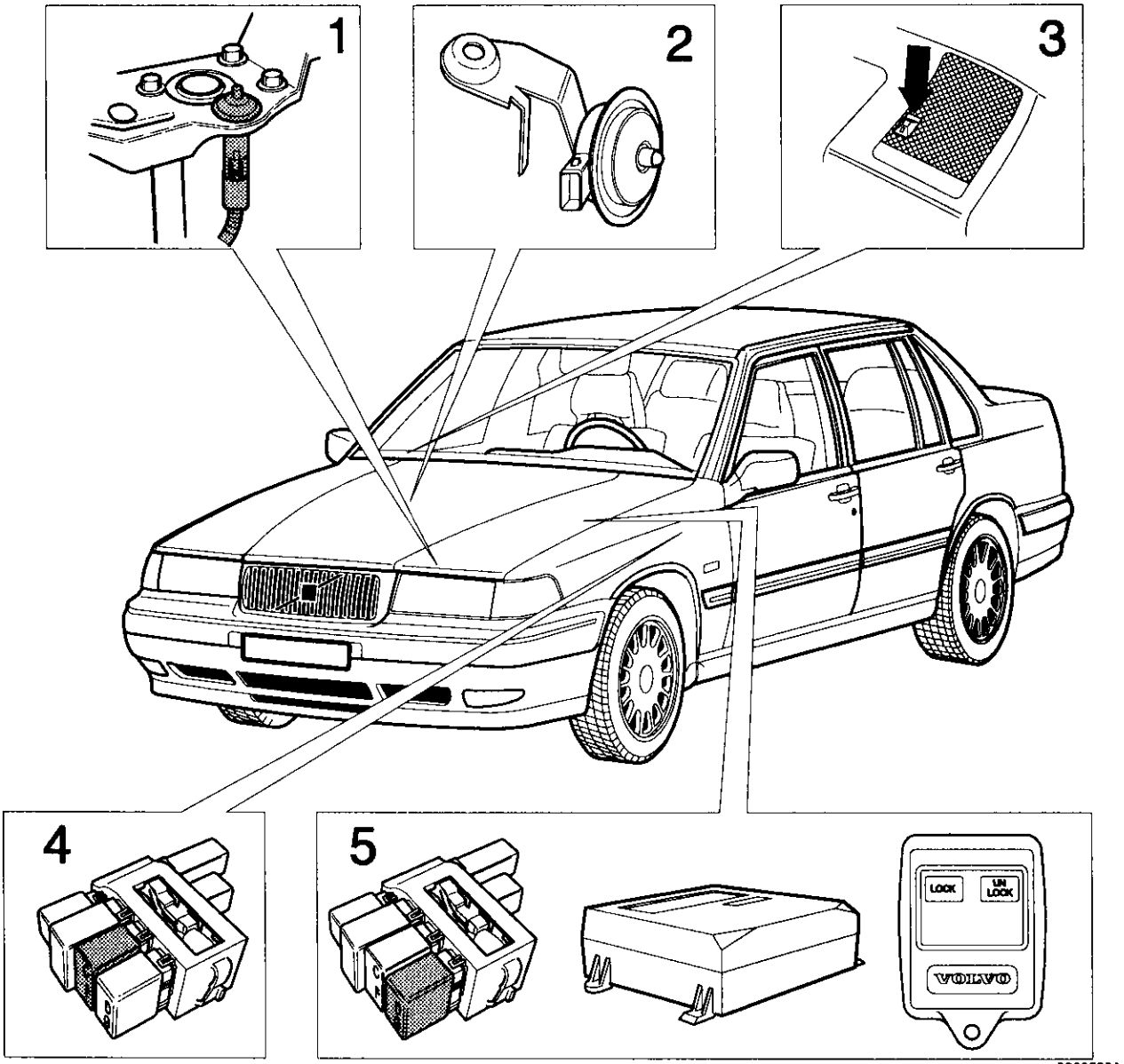

3600500A

The principal components of the basic alarm are:

1. Hood contact
2. Horn (or siren)
3. Indicator LED, on the speaker grill passenger side
4. Control module unit C/F

(5. Central locking system including relay, remote sensor and handset)

Components

Guard Alarm II principal components

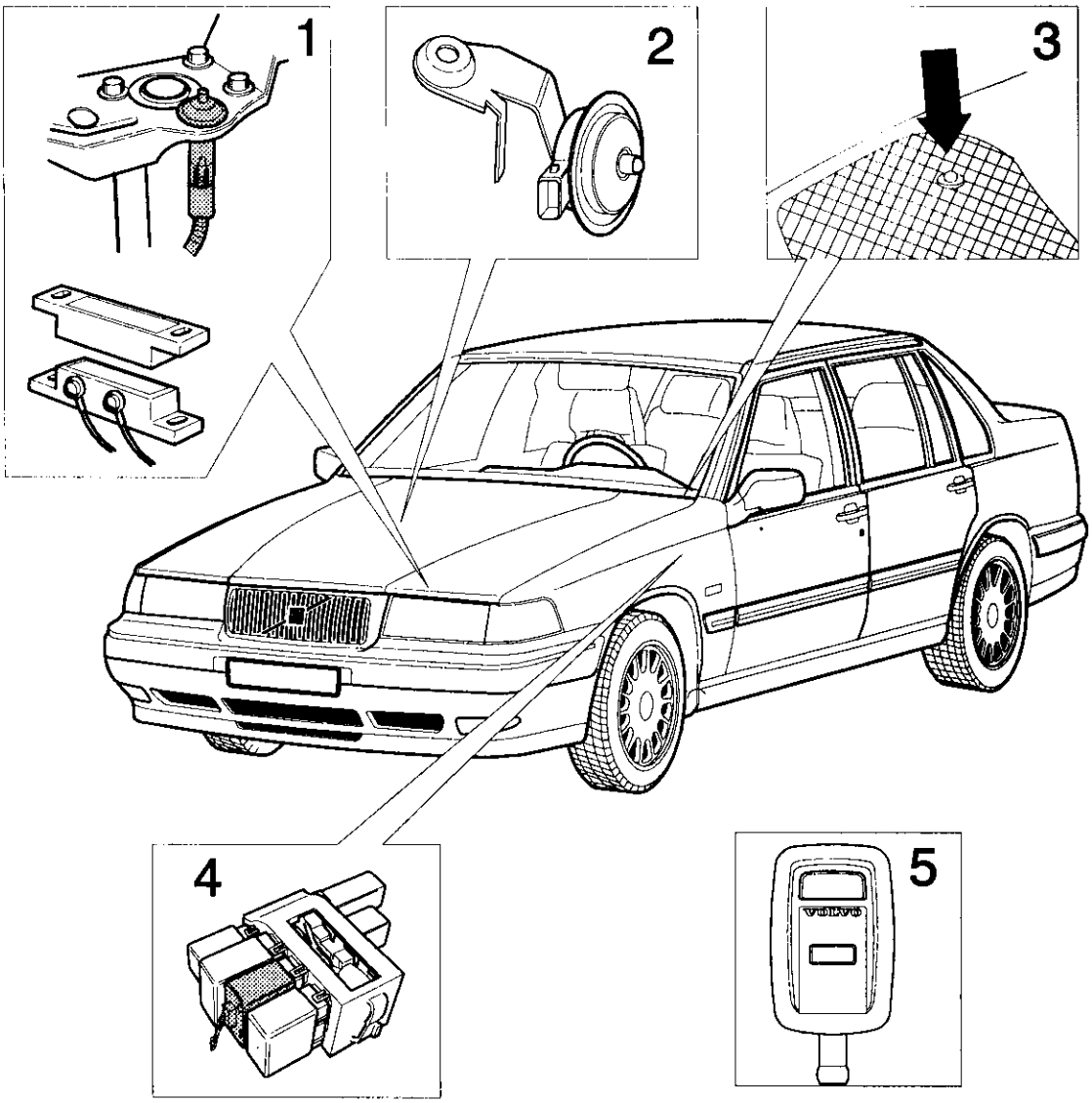

3600501A

Guard Alarm II principal components are:

1. Hood contact switch (960 1995-) or magnetic switch (940 1993-, 960 1993-1994)
2. Horn (or siren)
3. Indicator LED, on left or right speaker grill
4. Control module with built-in radio sensor and wiring, item C/F
5. Remote handset Guard Alarm II

The accompanying wiring is found in two different versions:

940 1993-, 960 1993-1994:
The alarm wiring is connected to the three extension connectors (2-, 4- and 8-pole) for alarm at the steering column. The alarm control module is connected to this wiring. There is separate wiring in the engine compartment for the magnetic switch and horn.

960 1995-:
The alarm control module is connected directly to the extension connectors in the relay distribution box, item C/F. The alarm wiring, which is connected to the upper side of the control module, is for connection to the indicator LED and sensor.

Alarm components in the car

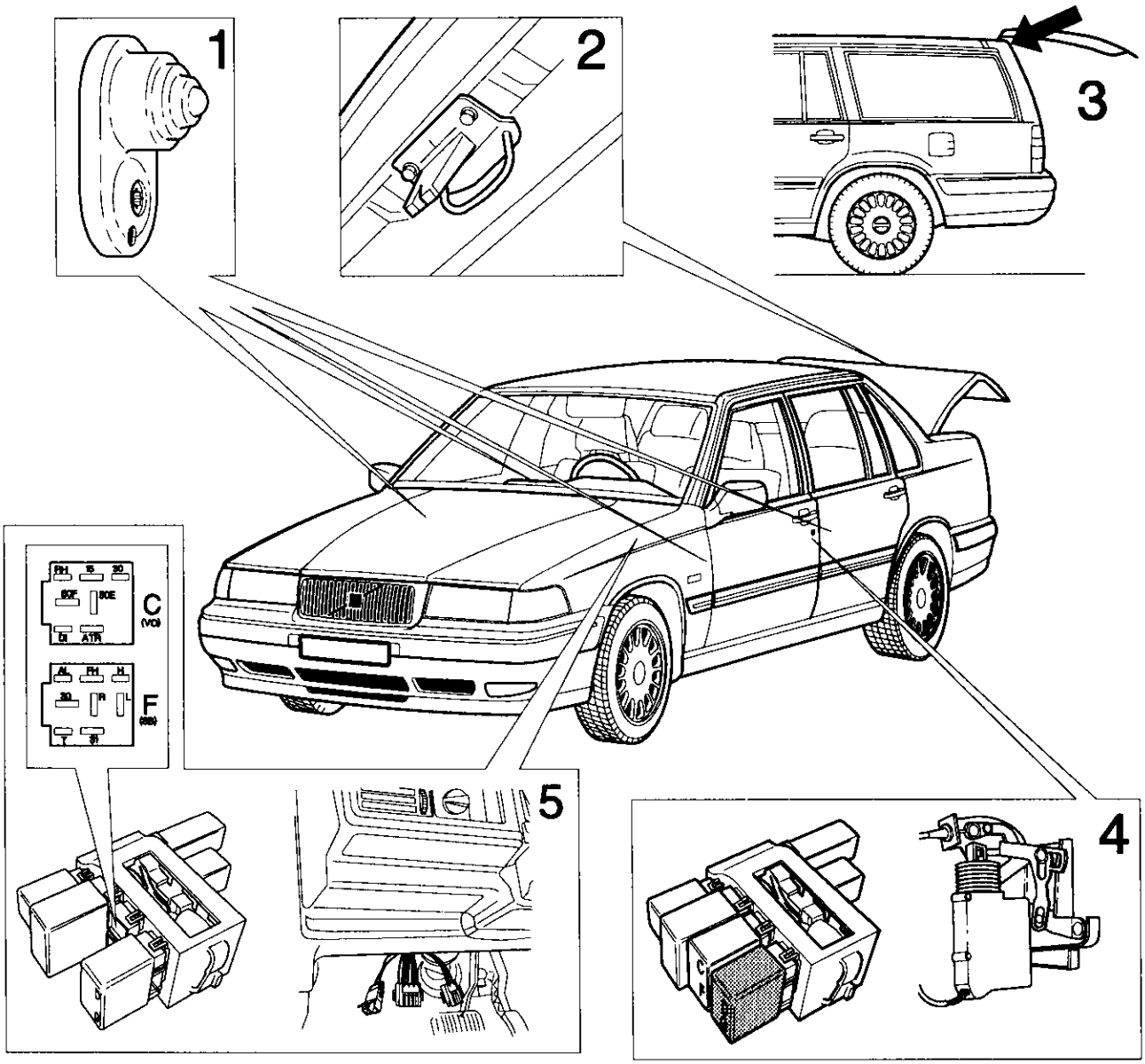

3600499A

The following components on the car are used in conjunction with the anti-theft device:

1. Door contacts
2. Trunk contacts 4-door
3. Tailgate contacts 5-door
4. Central locking system
5. Wiring runs for alarms 940 1993- and 960 1993-1994, and also for the control module item C/F for 960 1995-.

Door contacts (1)

The doors have traditional built-in contacts in the A-posts or B-posts. When a door is opened, the contact is grounded. The door contacts send a signal to the central locking relay, the interior lighting, and the alarm control module.

Trunk lid contact 4-door (2)

The trunk lid on the four-door model has a built-in contact in the locking mechanism. The contact goes to ground when the trunk is opened. The contact also governs the trunk lighting.

Tailgate contact 5-door (3)

On the five-door model, there is a built-in contact next to the hinge on the left hand side. The contact has the same function as on the four-door model.

Central locking with the basic alarm (4) 960 1995-

The central locking motor in the driver's door has an integrated two-position operating switch which sends grounding signals to the central locking relay.

The driver's door also has a micro-switch (AT-switch) mounted on the lock cylinder. Its purpose is to send a control signal to the central locking relay before the central locking setting device is affected by the door key, whereupon the relay sends out signals to the alarm control module to activate or deactivate.

When the central locking remote is operated, a code is detected by the sensor unit, which sends signals to the central locking relay, which in turn sends signals to the alarm for activation or deactivation.

Central locking with Guard Alarm II (4)

With this alarm the situation is reversed: i.e. it is the alarm control unit which receives the radio code and which in turn sends signals to the central locking relay for locking or unlocking.

The wiring (5)

The wiring runs from the above components to the alarm control module. The wiring is also connected to the start inhibitor, the turn signals, the horn and the alarm's indicator LED.

Components of the basic alarm

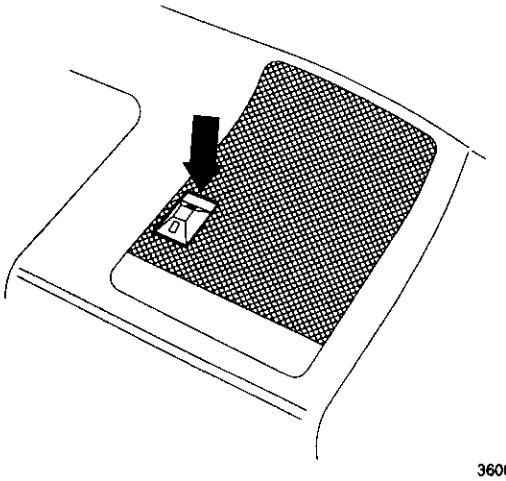

3600312A

Indicator LED

The indicator LED is mounted on the passenger side loudspeaker grill in the instrument panel. The LED is red and held within a plastic housing.

If the car is also equipped with AC/ECC air conditioning, the solar sensor is integrated within the LED's plastic housing.

The LED works in the following manner:

Activating the alarm

The LED is lit for 5 seconds before the alarm goes over to stand-by. After that it flashes every other second.

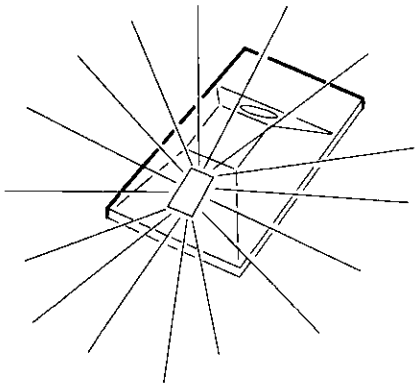

3600323A

Alarm is activated, fault somewhere in the loop:

LED does not light.

Alarm has been triggered:

The LED is lit for the first two minutes. This is followed by rapid flashing (approx. 20 times per second).

When alarm has been triggered and deactivated:

The LED is lit until the ignition is turned on.

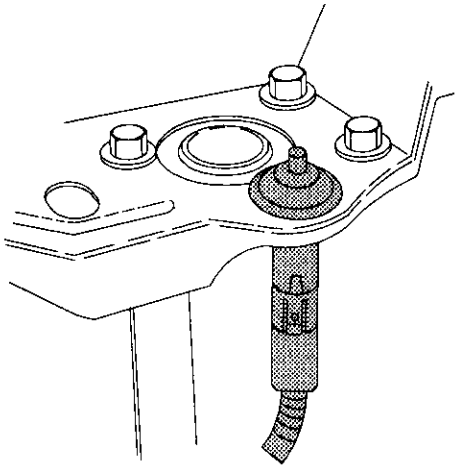

3600497A

Hood contact

There is a switch next to the left-hand hood catch which is grounded when the hood is opened.

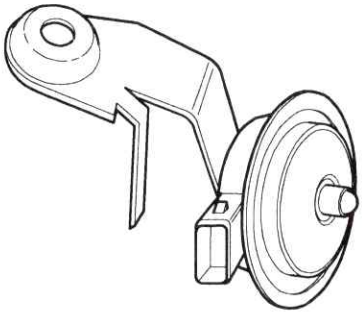

3600314A

Horn

When the alarm is triggered, attention is attracted by means of a separate horn which is mounted in the engine compartment.

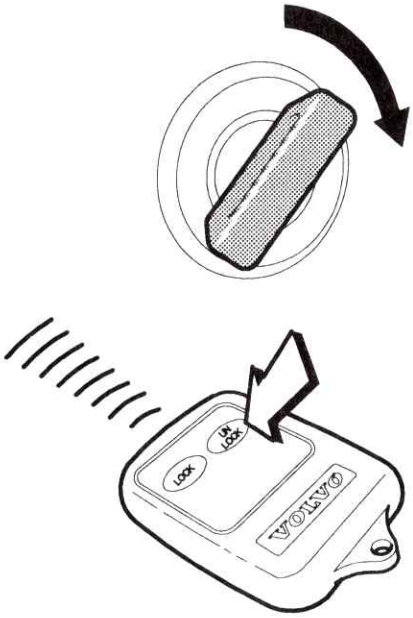

3600320A

Door key or remote

The alarm may be operated by means of the central locking remote or by means of the door key in the driver's door (not in some markets).

The central locking remote is described in detail in the service manual "Section 8 (83) Central locking 960 1995-".

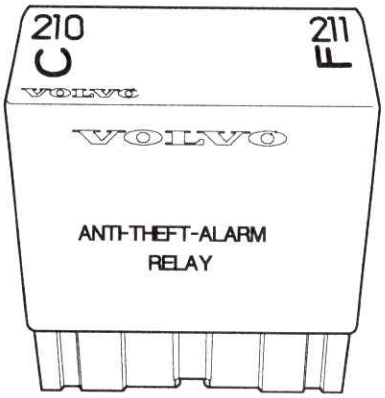

3600505A

Control module

The control module is mounted at items C and F in the interior distribution box.

There are three built-in relays for:

- Start inhibitor
- Flashing signal
- Horn signal

The base alarm control module connections:

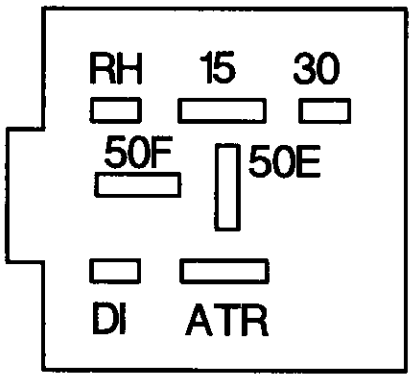

C
(VO)

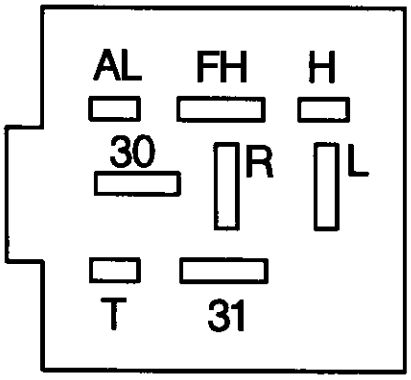

F
(SB)

3600303A

Relay base C
(corresponds to B in the circuit diagram)

Item	Number	Function
50F	1	Out voltage feed from starter inhibitor relay to starter motor. In alarm signal, if starter motor hot-wired.
	2	
	3	
15	4	In 12 V from ignition lock (15 A)
50E	5	In voltage feed to starter inhibitor relay from ignition lock (50)
DI	6	Out signal to LED, feed 0-5 V
	7	
30	8	Voltage feed from processor and relay input horn
RH	9	In alarm signal from trunk lid (ground signal)

Relay base F
(corresponds to A in the circuit diagram)

Item	Number	Function
30	1	In voltage feed to relay turn signals (visual alarm)
31	2	Ground
L	3	Relay out voltage feed to left turn signal
FH	4	In alarm signal from hood (ground signal)
R	5	Relay out voltage feed to right turn signal
T	6	In alarm signal from doors (ground signal)
	7	
H	8	Relay out voltage feed to horn
AL	9	In signal from central locking relay. 5 V constant input when the alarm is activated and constant low input signal (less than 1 V) when the alarm is deactivated.

Main diagram, Basic alarm 960 1995-

See also complete circuit diagram at back of book

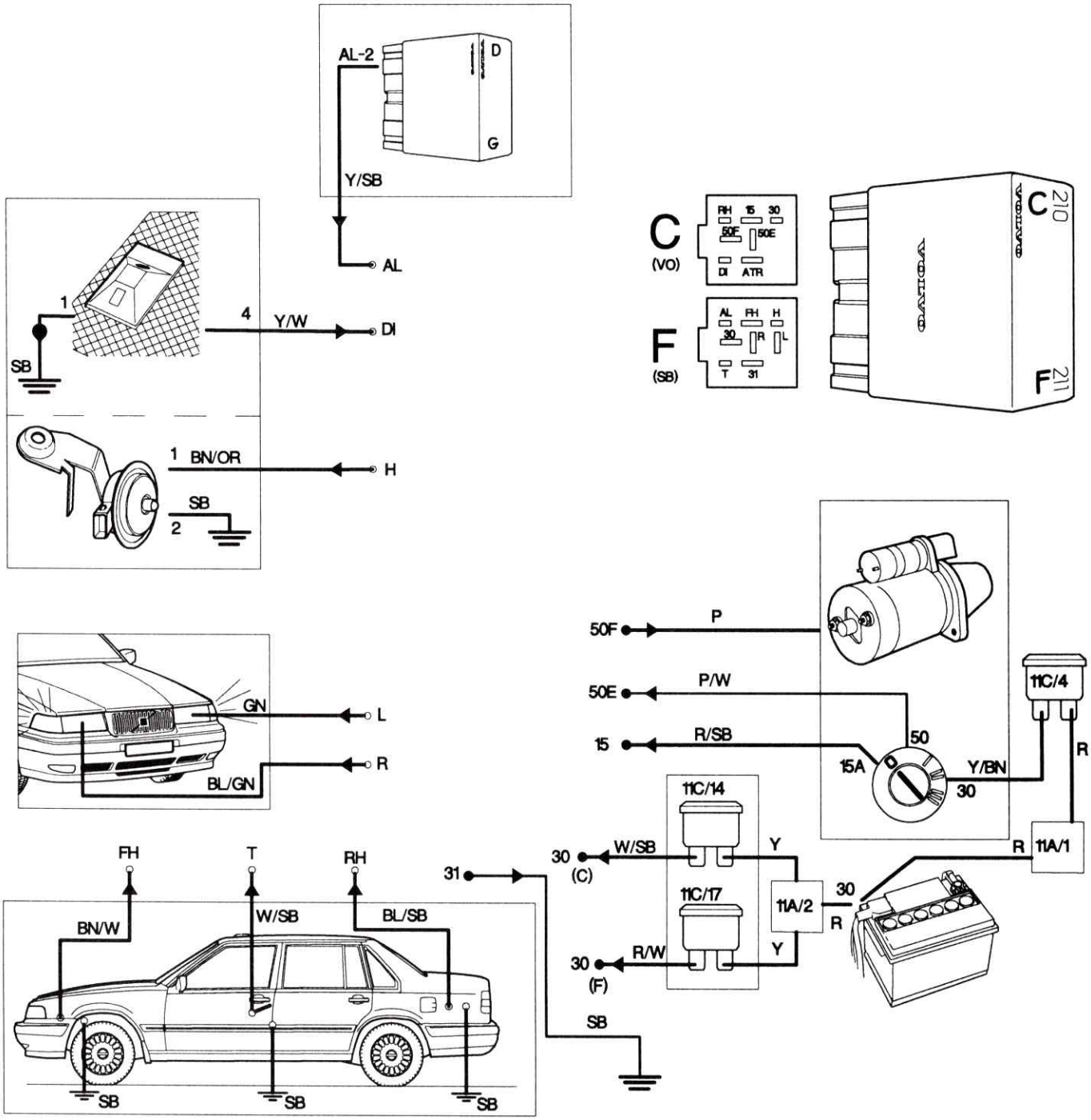

3600489A

Guard Alarm II components

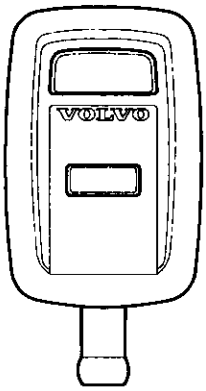

3600310A

Remote control

The remote is equipped with two buttons:

Button 1 (large). **Activation/Deactivation**

Button 2 (small). **Panic alarm**

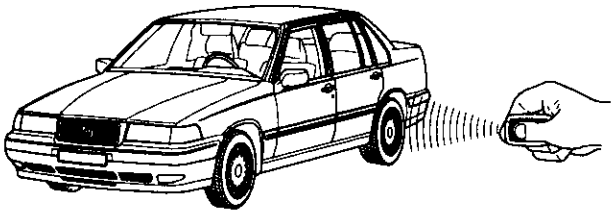

3600461A

Range of remote control

The alarm can be operated by the remote from all angles up to approx. 20-30 yards from the car.

The range may nevertheless vary since radio signals are affected by the environment.

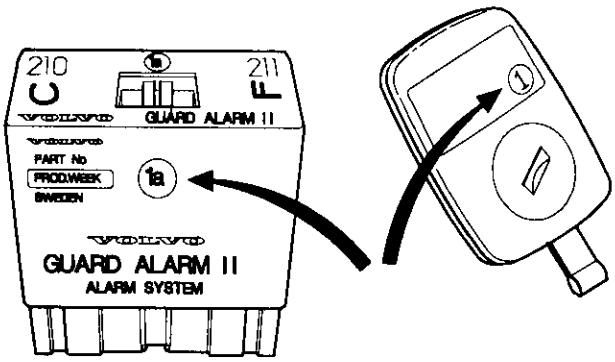

3600480A

Differing remote frequencies

Remote frequencies differ according to the market. A figure and letter combination in a circle is found on the underside of the handset indicating the frequency. The figure must match that given on the control module. The letter within the circle is merely a marketing code.

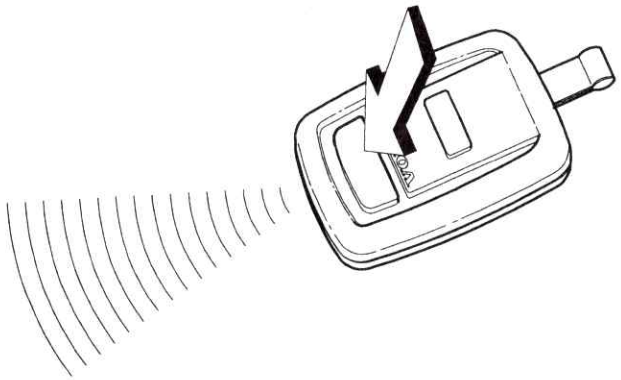

3600316A

Remote control transmission code

When remote button 1 or 2 is pressed, a special code is generated which is sent at radio frequency. The code signal consists of a rolling code series which is changed after each use (Anti-grab).

The device is delivered with two handsets. The codes of both handsets are pre-programmed in the control module's memory.

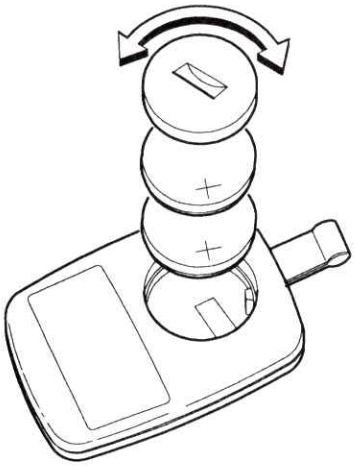

3600318A

Changing the batteries

The remote is powered by 2 batteries type CR 1220 (3 V). In normal use, battery life will be approximately one year.

Batteries should be changed once a year.

Note:
Batteries contain elements harmful to the environment. They should not be discarded with normal garbage.

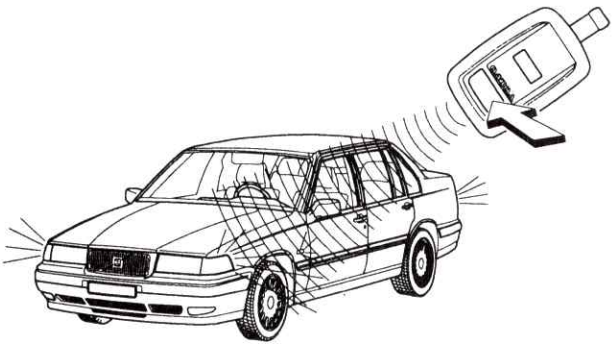

3600308A

Radio sensor

The radio signal sensor is built into the control module and uses the lead connected to DI as an antenna.

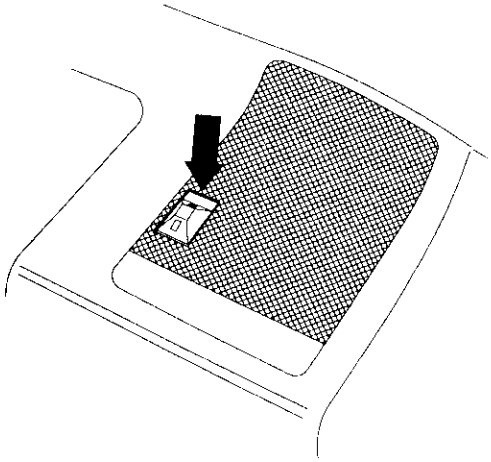

3600312A

The Indicator LED

Note: An indicator LED suitable for the basic alarm may be connected. On cars equipped with AC/ECC air conditioning, the LED is integrated with the solar sensor which is mounted on the loudspeaker grill on the passenger side.

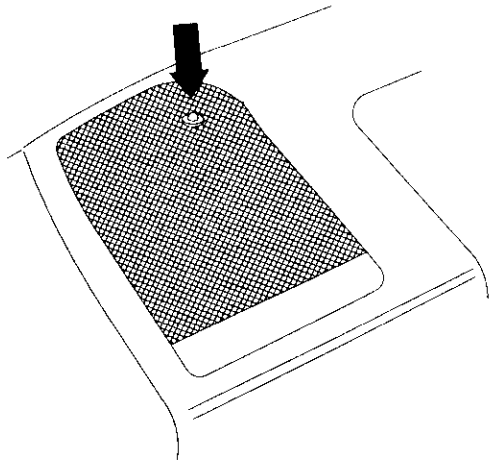

3600313A

Alternatively a separate indicator LED supplied with the kit can be mounted on the loudspeaker grill on the driver's side.

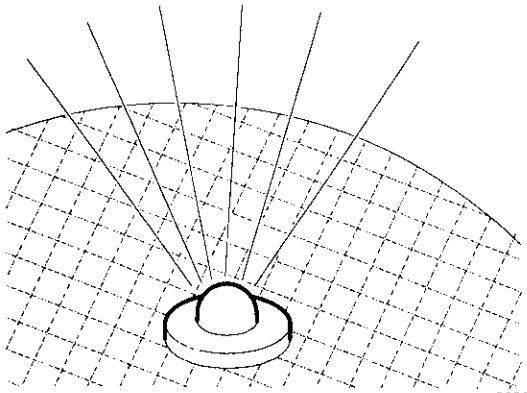

3600324A

The LED functions in the following way:

Alarm activated

The LED flashes once every second.

Alarm activated, fault somewhere in the loop:

The LED is lit for 5 seconds and then flashes every second.

Alarm triggered:

The LED flashes once a second.

Deactivated after alarm triggered:

The LED is lit until the ignition is turned on.

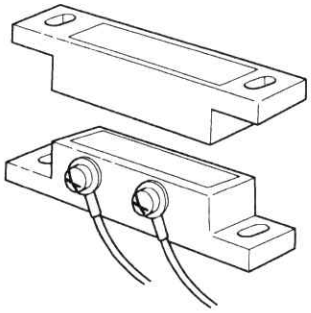

3600463A

Hood contact

940, 960 1993-1994:

A magnetic switch is mounted next to the left-hand hood catch and a magnet in the hood itself. When the hood is opened the magnetic switch is grounded (OC open-circuit function).

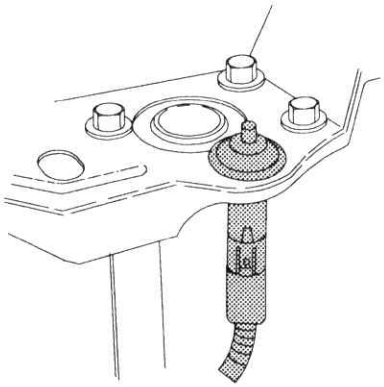

3600497A

960 1995-:

There is an electric switch next to the left-hand hood catch which goes to ground when the hood is opened.

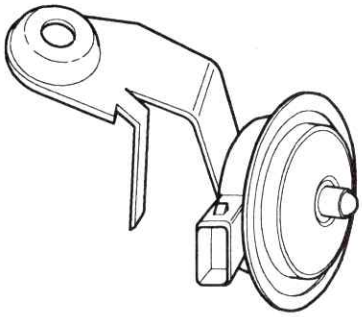

3600314A

Sound/visual signal

When the alarm is triggered, attention is drawn by means of a separate horn or siren. In addition, there is a visual alarm using the car's normal flashers.

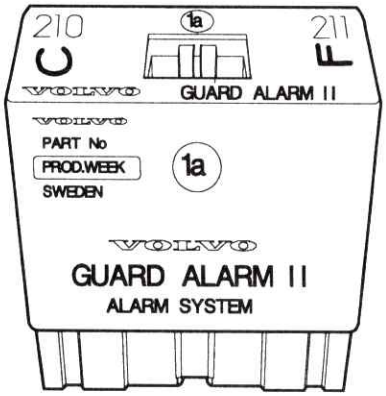

3600315A

Control module

The control module on the 940 1993- and 960 1993-1994 is connected by separate wiring to the three connectors at the steering column.

The control module on the 960 1995- is mounted at item C/F on the interior distribution box.

The sensor and indicator LED are connected to the control module by means of separate wiring to the top side of the module.

The module contains a pre-programmed micro-processor which can be reprogrammed for different functions. It is possible to store up to four different key codes for each remote in the micro-processor.

There are three built-in relays for:

- Start inhibitor
- Visual signal
- Sound signal

Guard Alarm II control module connections:

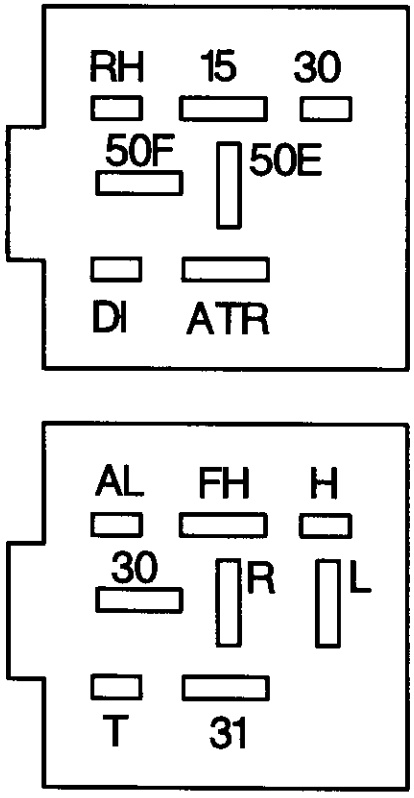

C
(VO)

F
(SB)

3600303A

Relay base C
(corresponds to B in the circuit diagram)

Item	Number	Function
50F	1	Out voltage feed from starter inhibitor relay to starter motor
ATR	2	12 V signal pulse to central locking relay for activation and deactivation (960 1995-). On deactivation, this pulse is followed by a signal pulse to the traditional central locking relay to lock up, as on the 940 1993- and 960 1993-1994 (ground signal).
	3	
15	4	In 12 V from the ignition lock (15 A)
50E	5	In feed to relay from ignition lock (50)
DI	6	Out to LED, voltage feed 0-4.5 V used on 960 1995- with AC/ECC. Lead connected to DI can also be used as an antenna.
	7	
30	8	Voltage feed from micro-processor and relay, input horn (sound alarm)
RH	9	In sound signal from trunk (ground signal)

Relay base F
(corresponds to A in circuit diagram)

Item	Number	Function
30	1	Voltage feed relay input turn signals (visual alarm)
31	2	Ground
L	3	Relay output voltage feed to left turn signal
FH	4	In sound signal from hood (ground signal)
R	5	Relay out voltage feed to right turn signal
T	6	In alarm signal from doors (ground signal)
	7	
H	8	Relay out voltage feed to horn
AL	9	Signal out to central locking relay (940 1993- and 960 1993-1994) for locking (grounding signal). **Note:** AL2 signal from central locking relay will not control Guard Alarm II

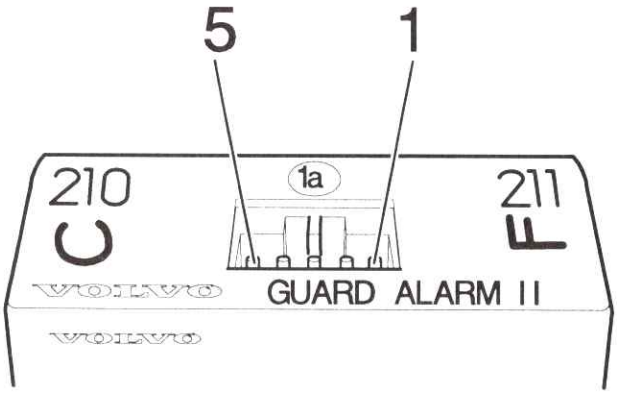

3600464A

5-pole base on top of control module

Item	Number	Function
DI	1	Signal out to LED, voltage feed 0-4.5 V. Lead to DI used as antenna. (If lead is not connected to DI, see DI on relay base C.)
31	2	LED ground
31	3	Sensor ground
30	4	Voltage feed to sensor, max 100 mA
S	5	In alarm signal from sensor (ground signal)

Main diagram, Guard Alarm II 960 1995-

See also complete circuit diagram at back of book

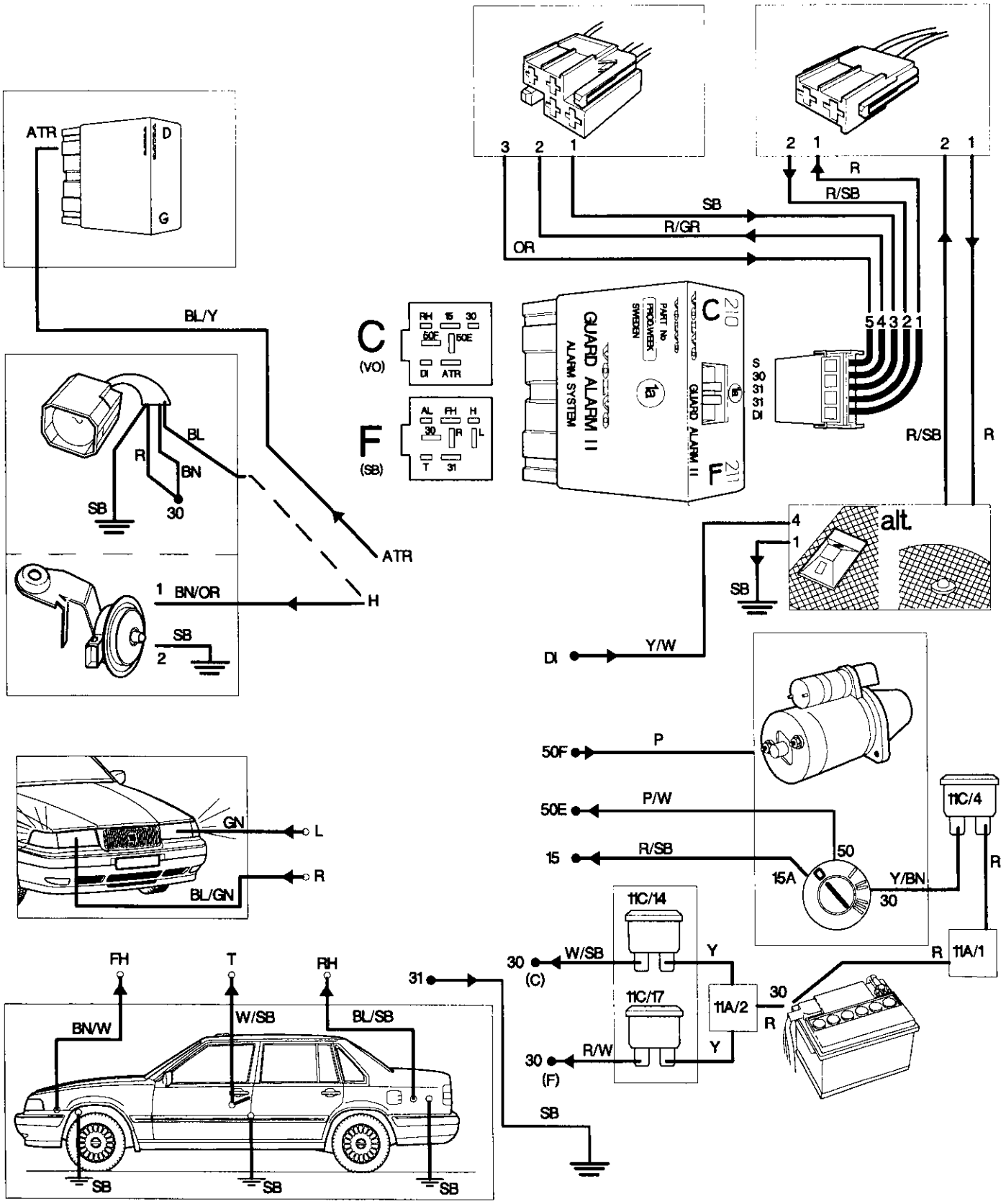

3600301A

Main diagram, Guard Alarm II 940 1993-, 960 1993-1994

See also complete circuit diagram at back of book

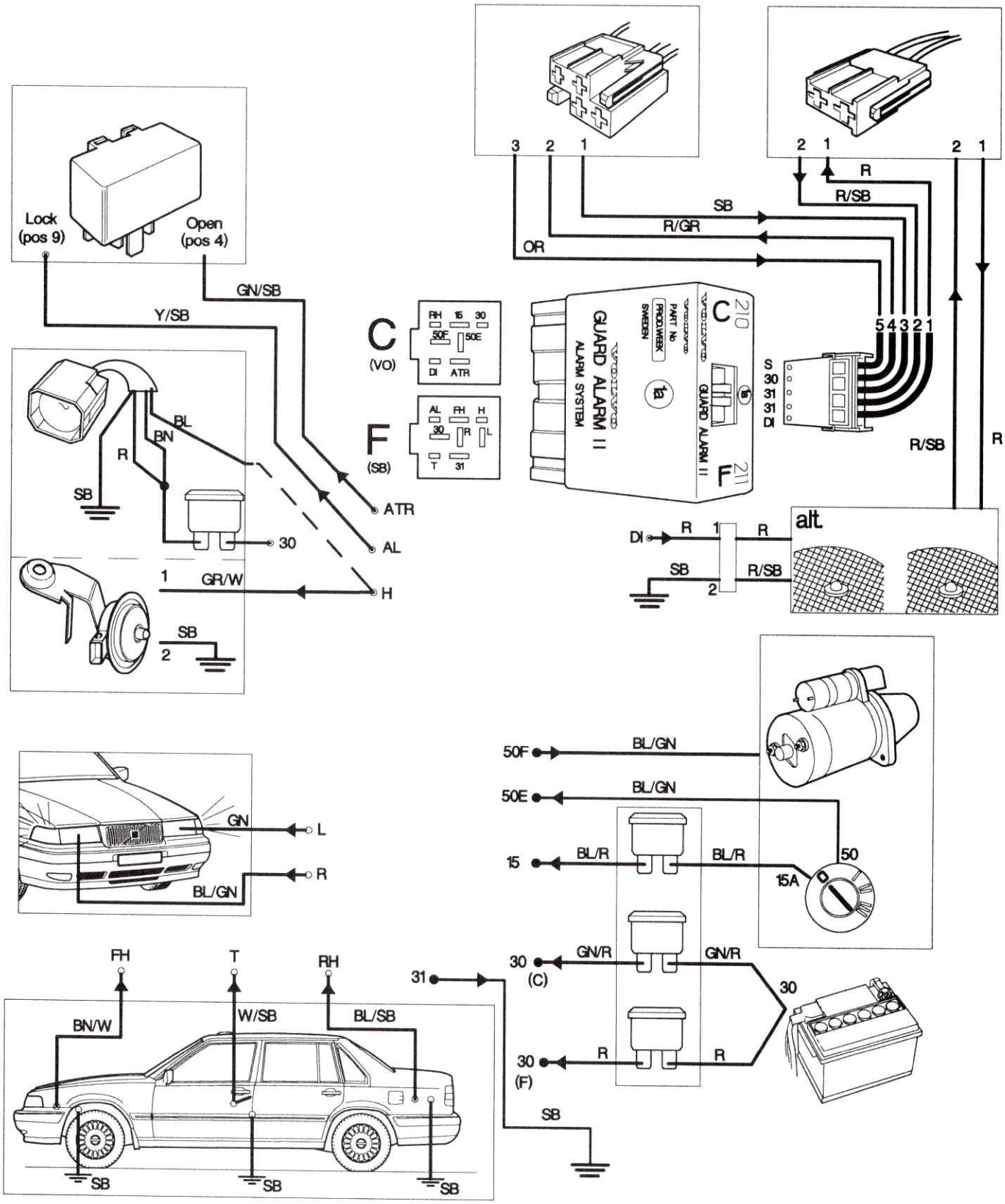

3600490A

Basic alarm functions

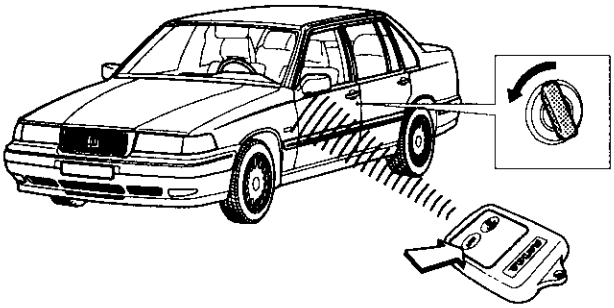

3600302A

Activation

The alarm is activated by means of the remote button "LOCK" or by locking the driver's door with the key (not in some markets). The central locking system's setting device and the lock cylinders' micro-switches or the remote sensor send signals to the central locking relay which in turn sends a control signal to the alarm control module.

The indicator LED is lit for 5 seconds and then starts to flash. This shows that the alarm is activated.

If any door, the hood or the trunk is open, the LED will not light. When the doors, hood and trunk lid are closed, the LED will start to flash showing that all alarm loops have been activated.

> **Note:** The alarm cannot be activated when the ignition is on.

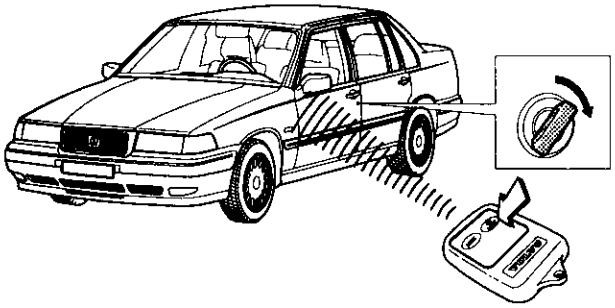

3600311A

Deactivation

The alarm is deactivated either by means of the remote button "UNLOCK" or by unlocking the driver's door with the key (not certain markets). The indicator LED will then immediately go out.

When the alarm is triggered

The alarm is triggered when:

- Doors, the hood or the trunk are opened.
- The ignition is on (or the starter motor is hot-wired).

When the alarm is triggered, the horn or siren sounds for 30 seconds and the turn signals flash for 2 minutes. During these two minutes, the indicator LED is lit and then starts to flash rapidly (approx. 20 times per sec.).

After deactivation with the remote button "UNLOCK" or the door key (i.e. unlocking), the LED will stop flashing but remain lit. The LED goes out once the ignition is turned on.

Note: A maximum of three alarms per loop can be triggered in every activation period.

The alarm is retriggered if the thief makes a new attempt.

If the car door is left open after the car is interfered with, the alarm will be retriggered when another alarm loop is set off or when the ignition is turned on.

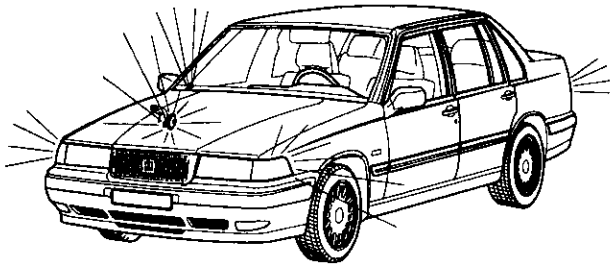

3600319A

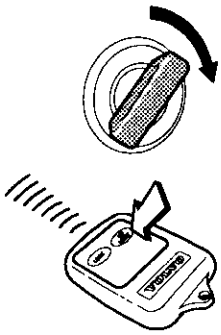

3600320A

Guard Alarm II functions

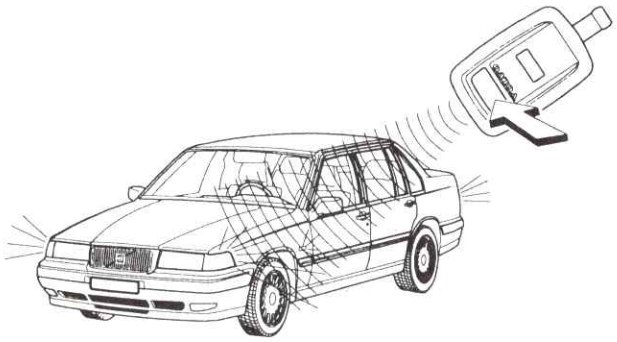

3600308A

Activation

Activation is carried out by pressing **button 1** on the remote.

The remote sends a signal to the sensor built into the control module. The signal is converted and decoded by the control module which determines whether the series of pulses is correct.

> **Note:**
> The alarm cannot be activated when the ignition is on.

Acknowledgement signal on activation

When the alarm is activated, there follows a long acknowledgement signal from the car's turn signals (programmable, see p.28).

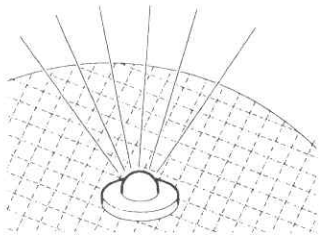

3600324A

Indication when alarm activated

When the alarm is activated the indicator LED flashes briefly.

Fault indication

If the indicator LED is lit for 5 seconds, this shows a fault in one of the alarm loops, e.g. an open door.

Deactivation

The alarm may be deactivated by pressing **button 1** on the remote.

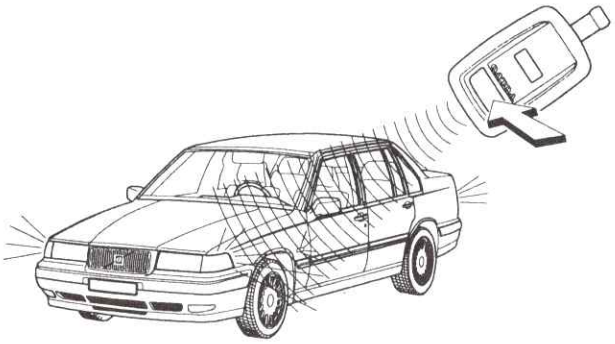

3600308A

Acknowledgement signal on deactivation

When the alarm is deactivated, there follows an acknowledgment signal in the form of two short flashes on the turn signals (programmable, see p.28).

> **Note:**
> If neither door, hood nor trunk are opened within 2 minutes following deactivation, the alarm is reactivated and locks the doors, hood and trunk (programmable, see p.28).

When the alarm is triggered

> **Note:**
> When the alarm has been activated, it cannot be triggered for 10 seconds.

The alarm is triggered when:
- A door, the hood or the trunk is opened.
- A sensor is set off.
- The ignition is turned on.

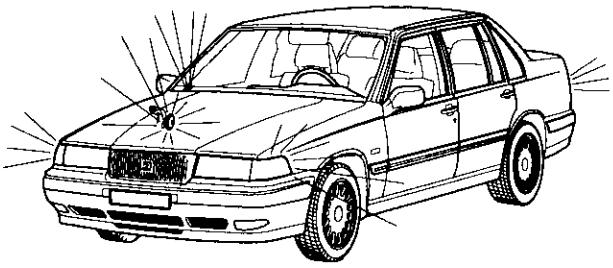

3600319A

When the alarm is triggered the horn/siren will sound for 30 seconds and the turn signals will flash for 5 minutes.

When the horn ceases, the alarm returns to stand-by.

The alarm is retriggered if the thief makes another attempt

If the car door is left open after attempted theft, the alarm will be retriggered if another loop is set off or if the ignition is turned on.

When the alarm is triggered the indicator LED will continue to flash.

Only when the alarm has been deactivated with button 1 on the remote will the LED stop flashing and remain lit, thus showing that the alarm has previously been triggered.

Note: This light will go out when the ignition is turned on.

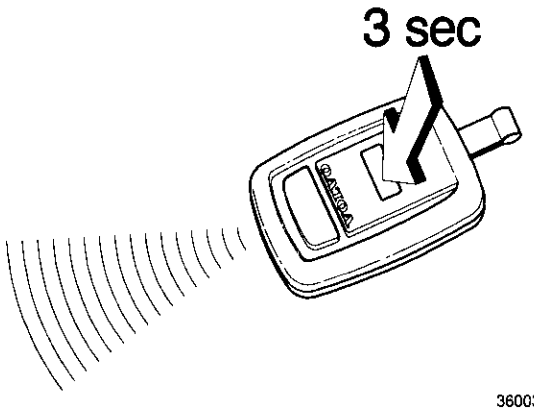

3600317A

Panic function

If **button 2** is kept depressed for more than **3 seconds** the alarm will be triggered. This is to call attention if you are attacked or if someone tries to break in or damage the car.

The panic function is shut off by pressing either of the buttons on the remote.

> **Note:**
> The panic function will not function if the ignition is on (programmable, see p. 28).

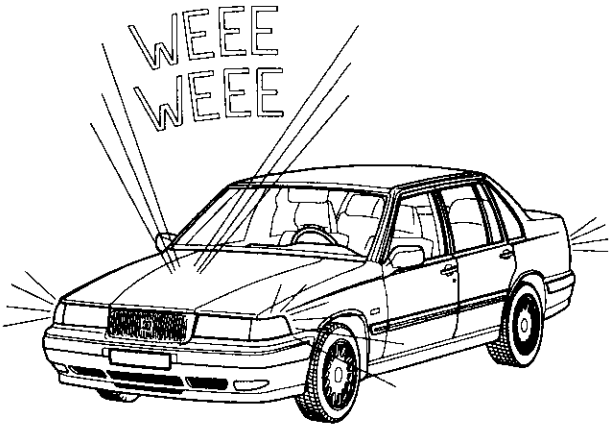

3600325A

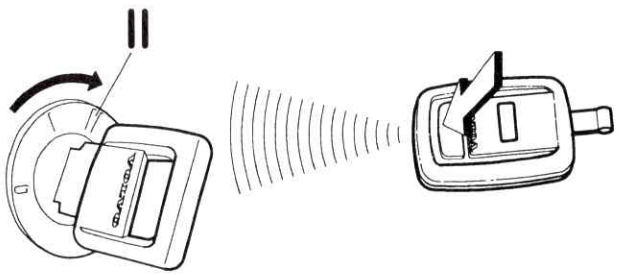

3600458A

Disabling a sensor

This function allows you to activate the alarm with animals in the car or on a ferry, e.g. when the level sensor might otherwise trigger the alarm.

- Deactivate the alarm.
- Turn the ignition key to item **II**.
- Press remote button **1** briefly.

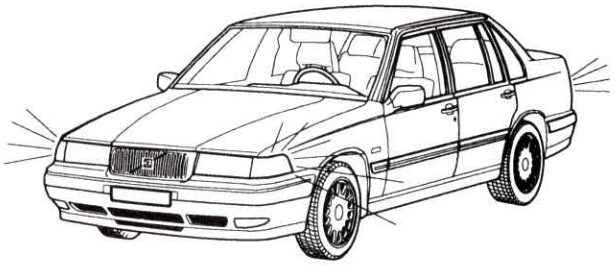

3600309A

Acknowledgement signal when disabled

A brief flash from the car's turn signals shows that the sensor input is disabled.

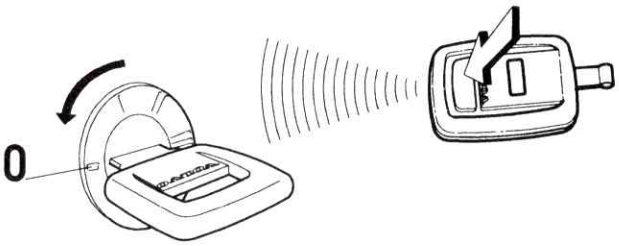

3600422A

Proceed as follows

- Ignition **off**.
- Activate alarm.

When the alarm is activated, all the other alarm functions work as normal.

Disabling is canceled when the ignition is turned on.

Service mode

In this mode the alarm is **turned off** and will not react to signals from the alarm inputs. The car battery can be disconnected without problems since the programmed alarm memory will remain for up to 10 years.

The car may be driven as though not equipped with an alarm.

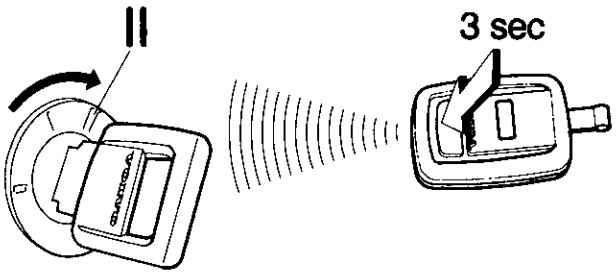

3600420A

Service mode is selected as follows:
- Deactivate the alarm
- Turn the ignition key to item **II**.
- Keep remote button **1** depressed for **three** seconds.

Note: Service mode has not been achieved until the car's flashers acknowledge with 2 short signals.

Service mode is indicated by the LED flashing every 3 seconds.

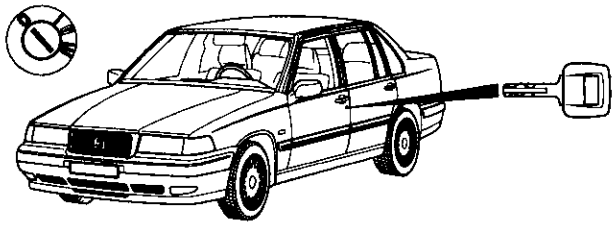

3600425A

Proceed as follows
- Ignition **off**.

- **Note:** Lock the car with the door key.

Note: Any siren with rechargeable batteries must be shut off separately with the appropriate key.

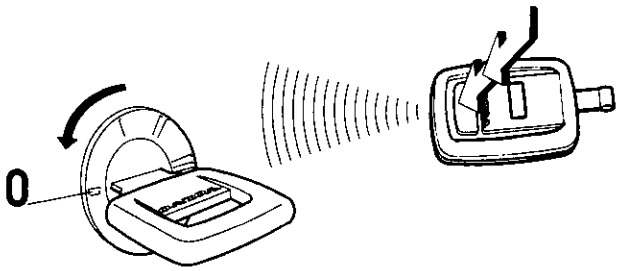

3600421A

Service mode is disabled as follows:
(Return to normal alarm function)
- Turn ignition key to **off**.
- Press remote button **1** twice.

The first touch will activate the alarm and unlocked doors will be locked.

- Activate any siren with the appropriate key.

Programming new remotes

All remotes which are to be used for the alarm must be programmed at the same time (max. 4).

The key code can also be programmed with the help of the programming box P/N 1399141-9, see Chapter Q.

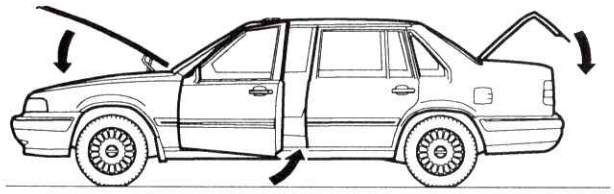

3600305A

Programming is carried out as follows:

- Close all doors, the hood and the trunk.
- Turn the ignition on and off at least 5 times within 10 seconds, leaving the ignition on the fifth time.

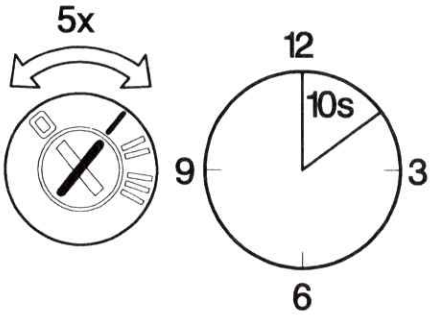

8300117A

- Depress only one of the two buttons on the remote involved.

The first remote must be programmed within 15 seconds.

The other remotes must be programmed at intervals of no more than 10 seconds.

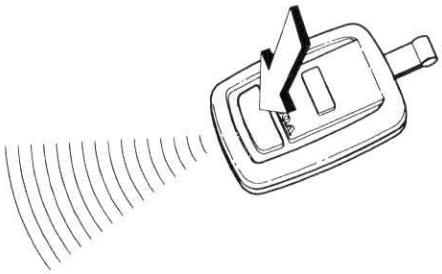

3600316A

When the alarm has accepted the code on each remote, the LED will be lit briefly.

- Turn off the ignition and test the remote.

Programmable functions on the alarm

The control module can only be reprogrammed with the help of the programming box P/N 1399141-9, see chapter Q.

Values enclosed in < > are pre-programmed:

Horn signal:	Continuous	<Pulsating>
Panic alarm:	<On>	Off
Reactivation:	<On>	Off
Acknowledgement signal flashers:	<On>	Off
Acknowledgement signal horn:	On	<Off>

Note: If a siren is fitted, the alarm control module should be set to continuous.

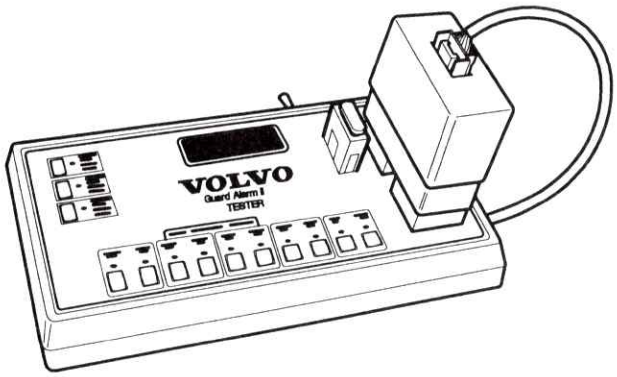

0800464A

> **Note:**
> Depending on legal requirements, the pre-programmed settings may be changed for certain markets. The legal requirements for each market are given in the alarm instructions.

Fault tracing

AA. Fault tracing structure

For the best results proceed in the order shown below.

Read the following before commencing:

		Page
To be observed while fault tracing on the alarm system	AB	30
Symbols	AC	33

Identify the symptoms under the following headings:

No alarm when door is opened	B	34
No alarm on hood	C	39
No alarm on trunk lid	D	46
No alarm when sensor activated (only Guard Alarm II)	E	51
False alarm	F	54
No horn when alarm triggered	G	56
No visual signal when alarm triggered	H	59
Start inhibitor not functioning	J	62
Start inhibitor will not disengage	K	64
Indicator LED faulty	L	65
Basic alarm cannot be activated or deactivated	M	68
Guard Alarm II cannot be activated or deactivated	N	79

Commence fault tracing under the right heading.

Note:

If the relevant symptom is not listed above, proceed to:

Fault tracing on the alarm wiring	P	86
Programming and testing the control module (only Guard Alarm II)	Q	90
General	QA	90
Reprogramming the alarm functions	QB	91
Programming key codes	QC	93
Alarm test of the 10 most recent alarm causes	QD	94
Control module self test	QE	95

AB. Important factors to observe while fault tracing on the anti-theft alarm

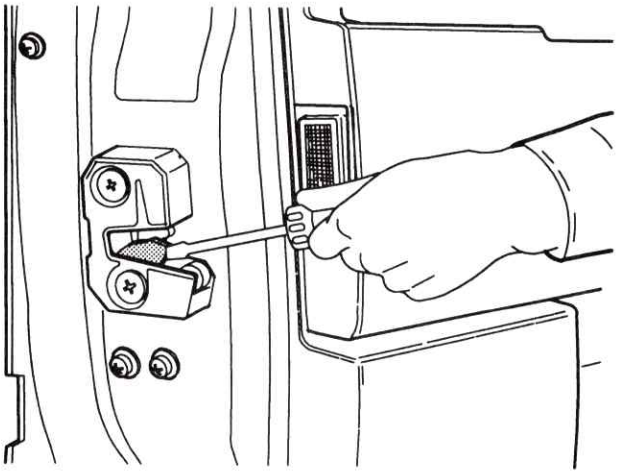

8300333A

Locking the door mechanism by hand with the door open

When fault tracing it can be practical to have the driver's door open. The lock mechanism can be placed in closed position by forcing in the latch with a screwdriver.

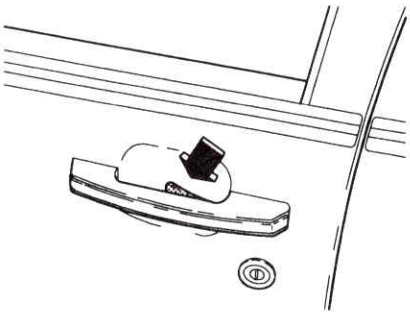

8300340A

Upon completing fault tracing, the latch can be returned to open position by opening the door by means of the outer or inner door handles.

8300298A

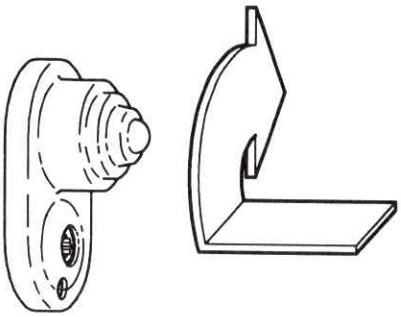

8300341A

Manual closure of the door contacts

The door contacts affect the alarm function. If desired, the door contacts can be closed (although the door is open) by pressing them in and turning clockwise. The door contacts are returned to position when the door is shut once more.

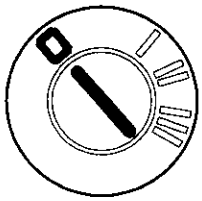

3000037A

Turn off the ignition when:

- Connecting and disconnecting test instruments.
- Plugging in and unplugging the central locking relay and the alarm control module.
- Connecting and disconnecting contacts.
- Measuring with an ohmmeter.
- Measuring with a voltmeter unless otherwise stated in the instructions.

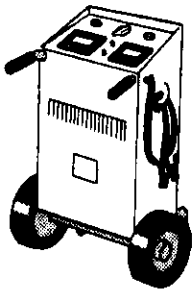

S145694

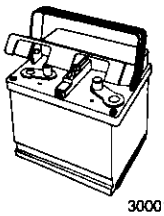

3000101A

Battery

When the various components are tested, it is important for battery voltage to be normal. If necessary, a battery charger can be connected during testing.

Maximum permitted charging current:
15 Amps at 16 Volts.

- Do not disconnect leads when the engine is running.
- Disconnect battery leads when boosting.

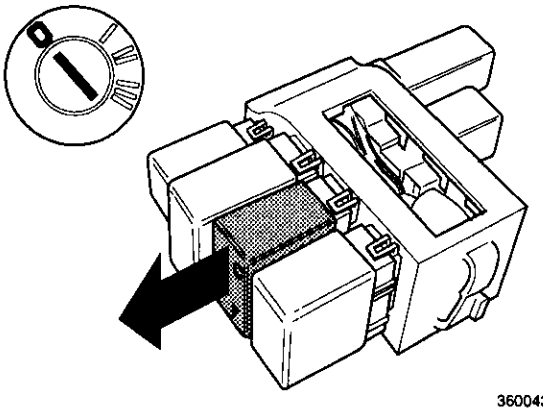

3600433A

The alarm control module

While fault tracing, the control module should in most cases be removed, so that measurements can be made in the relay bases.

The module should be replaced upon completion of fault tracing.

In order to test activation/deactivation the control module must be plugged in.

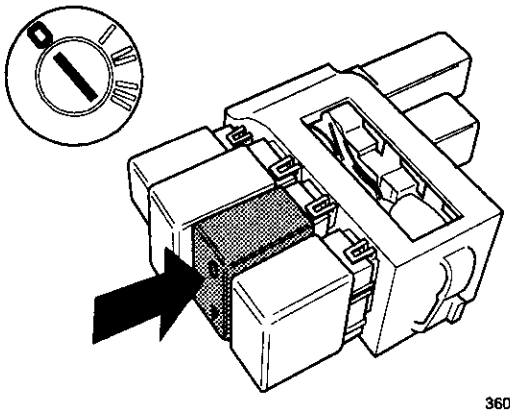

3600435A

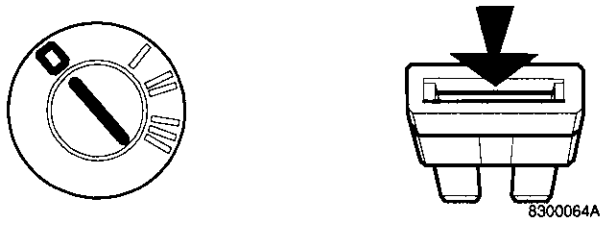

Fuses

Note: Make a habit of always checking that relevant fuses are intact before commencing fault tracing.

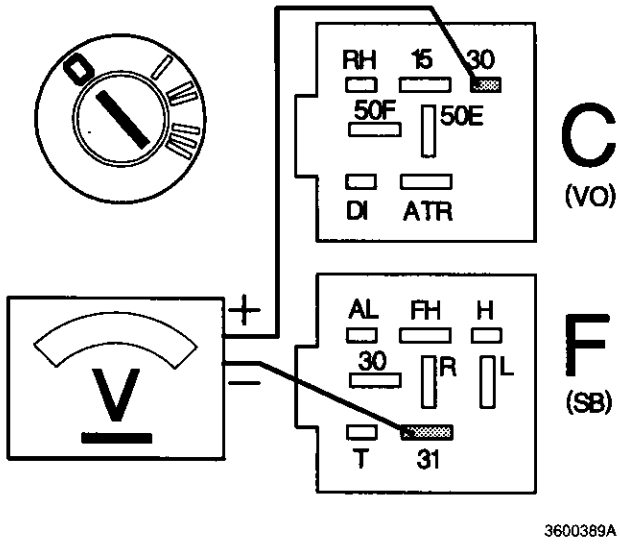

Measurements with an ohmmeter/ voltmeter

> **Note:**
> Take care when measuring pins or sockets in connectors or relay bases so as to avoid damage to pins and to prevent electrical faults being caused in the system. Use a matching pin in the correct relay base item.

Follow the instructions carefullly when taking readings. Observe the correct setting of the ignition if an ohmmeter or voltmeter is to be used and the items where measurements are to be taken.

- Place the test meter probes carefully on the pins.
- Never force the test probe into a connector.

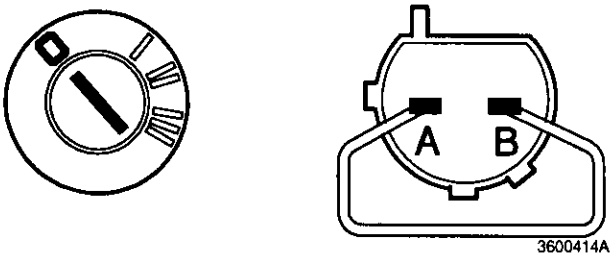

Bridging

> **Note:**
> Take care when bridging so that no damage is done.

Carry out any bridging at the items described in the relevant instructions.

For simple bridging on items for control signals (normally to ground) use a short lead with stripped ends.

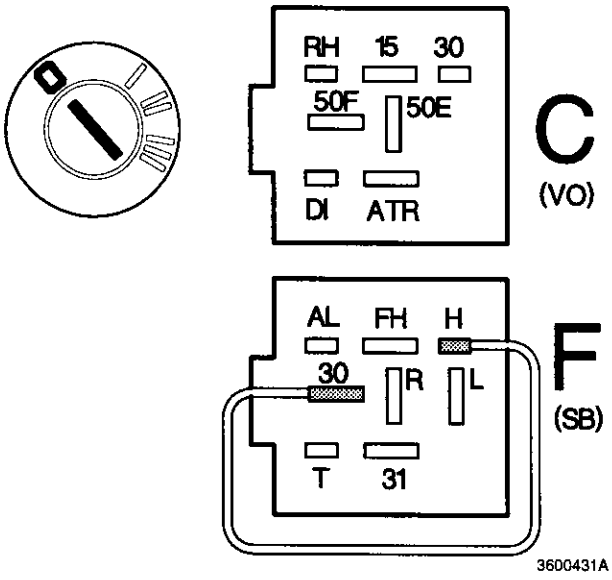

For bridging item H (horn) and item L/R (flashers) with battery voltage in the relay base, use a heavy lead (e.g. 1.5mm) with flat connectors 6.3.

Crimping of connectors and leads is described in the service manual "Section 3 (37) Repair of leads and renewal of terminals 850, 900".

AC. Symbols

In fault tracing, illustrations and symbols are used in certain areas to simplify the procedure and make the service manual easier to read.

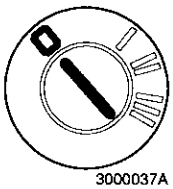
3000037A

Ignition off

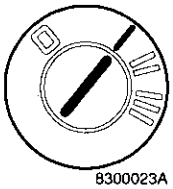
8300023A

Ignition position I
(accessories)

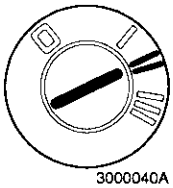
3000040A

Ignition on
(position II)

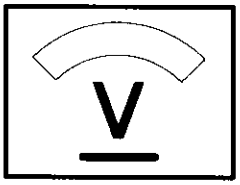

3000031A

DC voltmeter

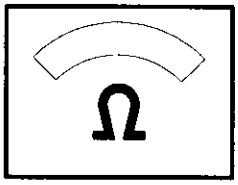

3000036A

Ohmmeter

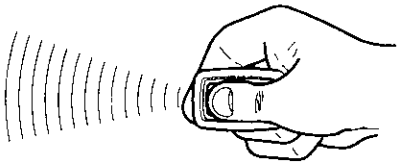
3600504A

Locking (activation) or
unlocking (deactivation)
by remote

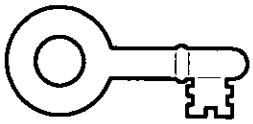
8300072A

Locking (activation) or
unlocking (deactivation)
by key

8300069A

Locked position
(activation)

8300070A

Unlocked position
(deactivation)

B. No alarm when door is opened

B1

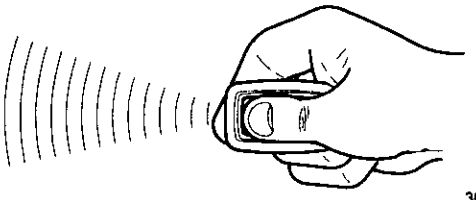

3600504A

Checking the door contacts

– Deactivate the alarm.

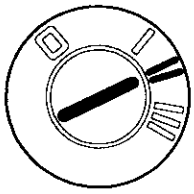

3000040A

– Ignition on.

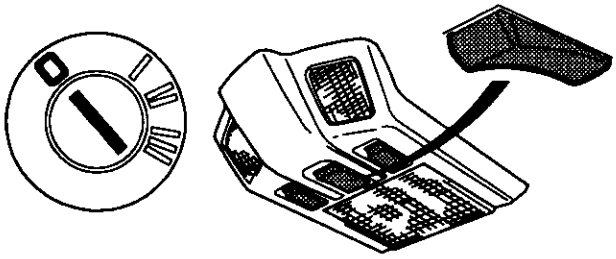

8300300A

– Ignition off.
– Check that the interior light switch is in position "door".

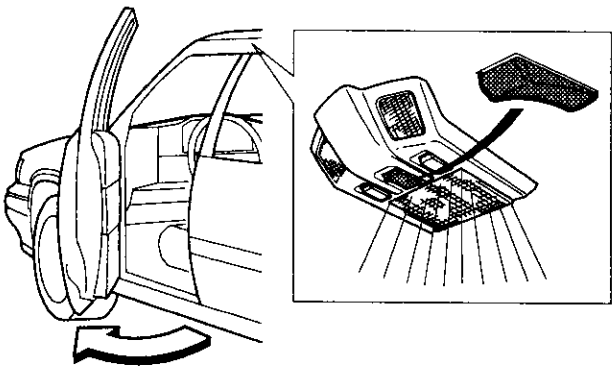

3600438A

– Open a door.
The interior light should come on.

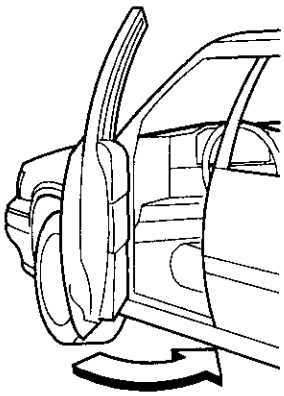

8300320A

– Close the door concerned.

940 1993- and 960 1993-1994:

An armature with prolonged interior lighting should go out after about 20 seconds.

An armature without prolonged interior lighting should go out immediately.

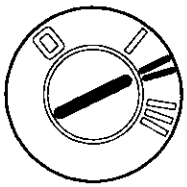

3000040A

960 1995-:

– Set ignition to position **II**,
so that prolonged lighting goes off.

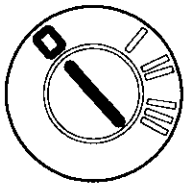

3000037A

– Set ignition to **off**.

Try all doors

– Repeat the procedure on the remaining doors.

The interior light should come on when each door is opened.

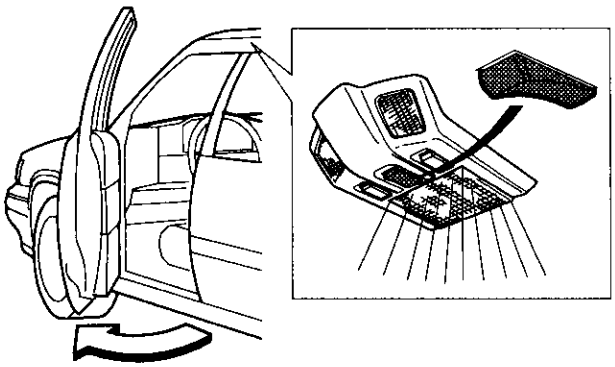

3600438A

If all results are correct:

940 1993-:

There is a break in the lead from connector C1 item 30 to the alarm relay base item T.

- Check connections as per step RA1.
  Rectify fault or renew the lead.

960 1993-1994:

There is a break in the lead from connector C1 item 27 to the alarm relay base item T.

- Check connections as per step RA1.
  Rectify fault or renew the lead.

960 1995-:

- Continue with step B2.

If there is a deviation:

940 1993- and 960 1993-1994:

- Investigate interior lighting

960 1995-:

- See service manual "Section 8 (83) Central locking 960 1995", Chapter G.

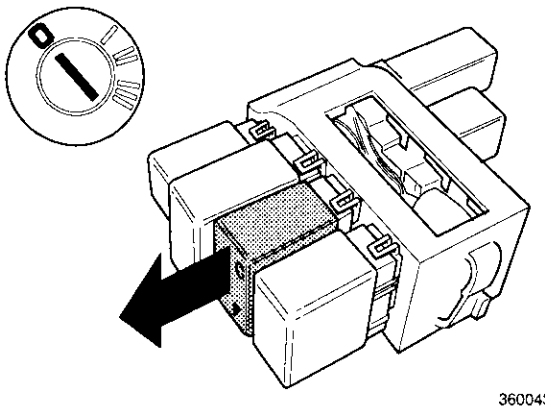

3600433A

B2

Checking signals from the central locking relay

– Ignition off.

– Remove the alarm control module (item C/F).

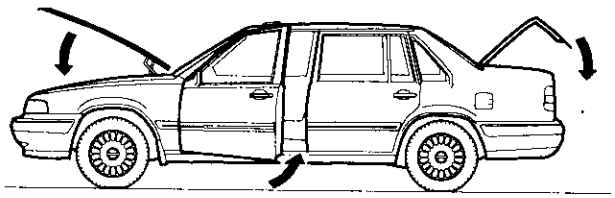

3600305A

– Close all doors, the hood and the trunk.

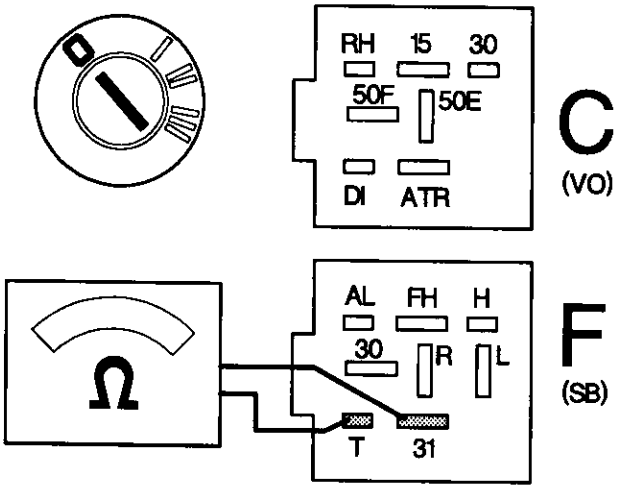

3600391A

– Connect an ohmmeter between item T and item 31 on the alarm relay base.

The ohmmeter should read infinity when all doors are closed.

If the reading is correct:

- Proceed to next page.

If the reading deviates:

- Continue with step B3

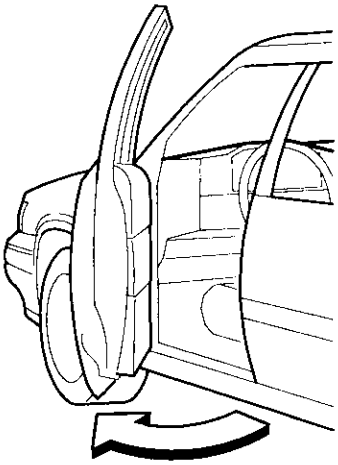

3600304A

– Open a door.

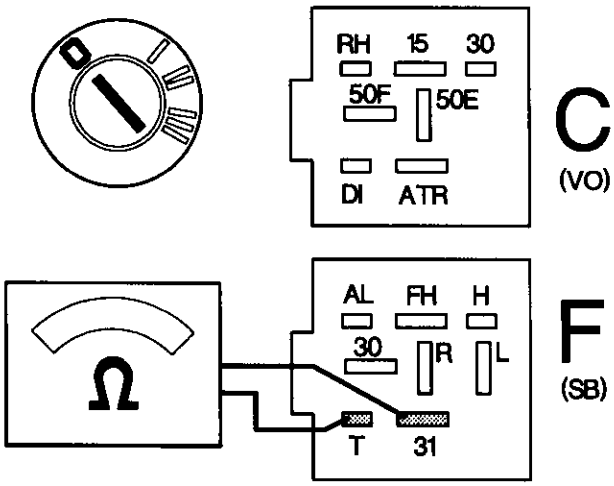

3600391A

– Connect an ohmmeter between item T and item 31 on the alarm relay base.

The ohmmeter should show approx. 0 ohms when the relevant door is open.

If the reading is correct:

There is most likely a fault on the control module.

- Carry out fault tracing as described in Chapter P.

If the reading deviates:

- Continue with step B3.

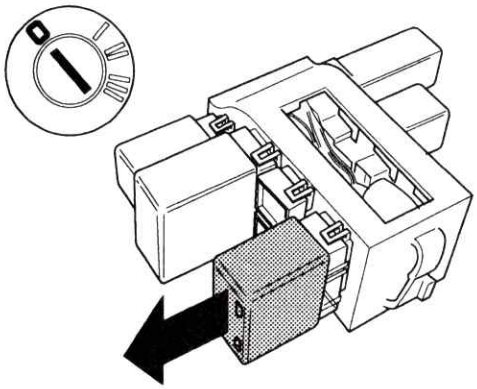

3600434A

B3

Checking the signal lead from the central locking relay

– Ignition off.

– Disconnect central locking relay items (D/G).

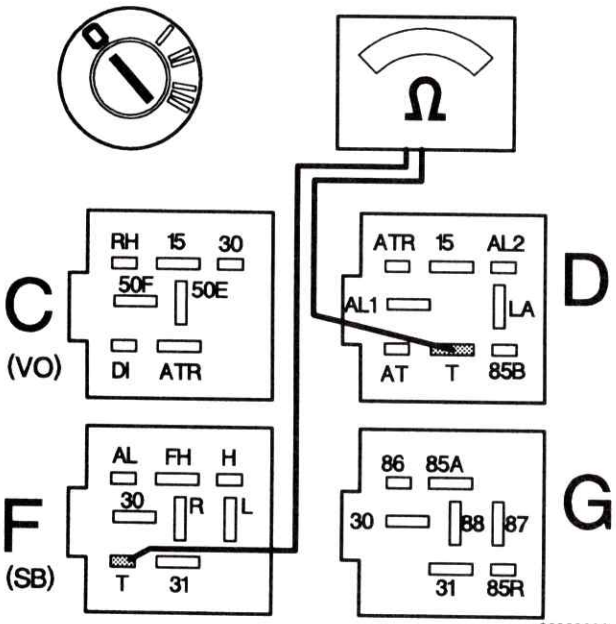

3600326A

– Connect an ohmmeter between the **alarm** relay base item T and the **central locking** relay base item T.

The ohmmeter should show approx. 0 ohms.

If the reading is correct

There is most likely a fault on the alarm control module.

- Proceed with fault tracing as described in Chapter P.

If the reading deviates:

There is a break in the lead between the alarm relay base item T and the central locking relay base item T.

- Rectify the fault or change the lead.
  Replace the central locking relay.
  Replace the alarm control module.

C. No alarm on hood

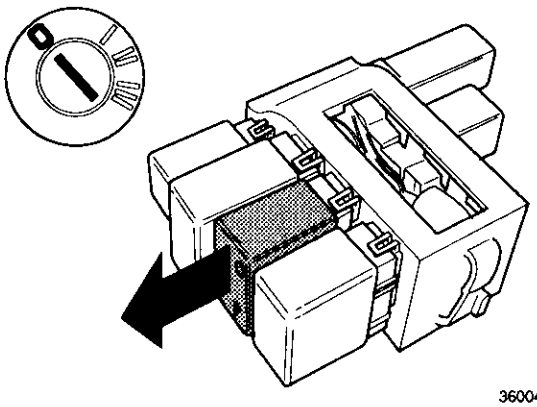

3600433A

C1

Check signal leads from doors and trunk

Note: Applies only to basic alarm
For Guard Alarm II, proceed to C2.

– Ignition off.
– Remove the alarm control module (item C/F).

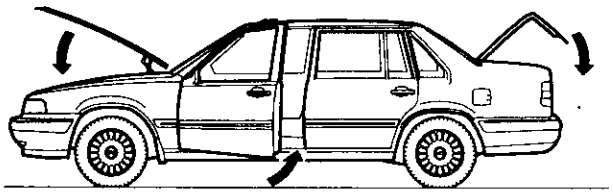

3600305A

– Close all doors, the hood and the trunk.

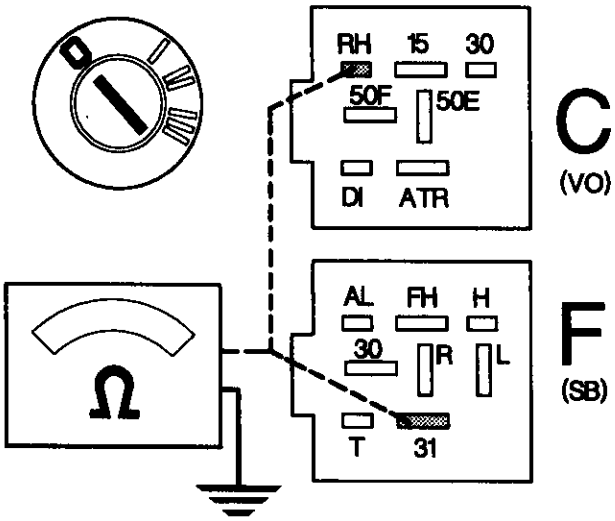

3600393A

Measurement A:
– First connect an ohmmeter between ground and the alarm relay base item T.

Measurement B:
– Then connect the ohmmeter between ground and the alarm relay base item RH.

The ohmmeter should show approx. 0 ohms in both readings.

If both readings are correct:
- Continue with step C2.

If there is a deviation in reading A:
- Proceed with fault tracing as per Chapter B.

If there is a deviation in reading B:
- Proceed with fault tracing as per Chapter D.

C2

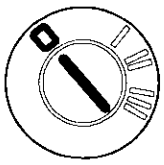

3000037A

Checking the hood contact's ground lead

– Ignition off.

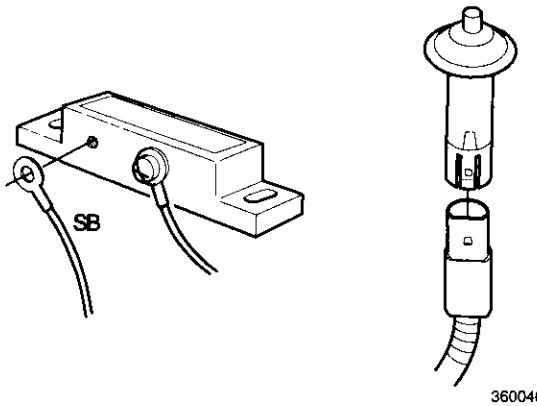

3600466A

940 1993- and 960 1993-1994:

– Remove the black lead (SB) from the magnetic switch.
– Check that the switch is clean and dry.

960 1995-:

– Remove the hood contact's 2-pole connectors.

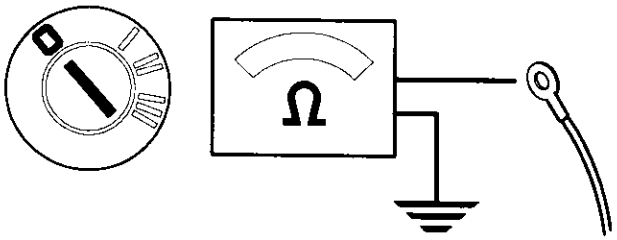

3600479A

940 1993- and 960 1993-1994:

– Connect an ohmmeter between ground and the black lead.

960 1995-:

– Connect an ohmmeter between ground and connector item B (black lead).

The ohmmeter should show approx. 0 ohms.

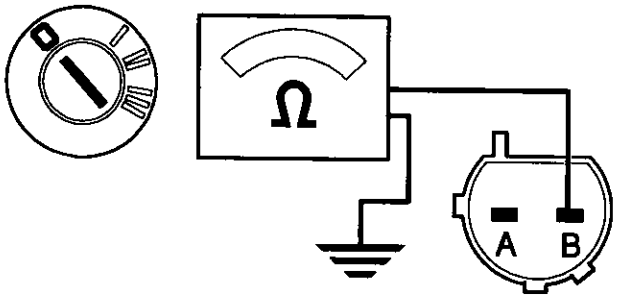

3600413A

If the reading is correct:

- Continue with step C3.

If the reading deviates:

There is a break in the ground lead.

- Rectify the fault or renew the lead.
  Replace the hood contact lead or connector.

C3

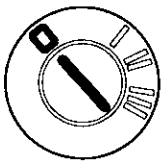

3000037A

Checking the signal lead

– Ignition off.

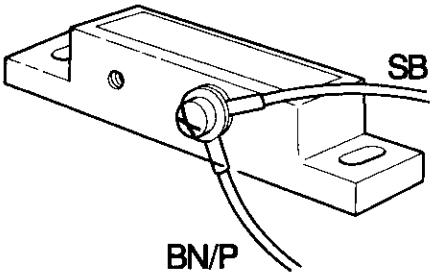

3600465A

940 1993- and 960 1993-1994:

– Create a bridge by moving the black lead (SB) and connecting it to the brown/pink lead (BN/P) on the magnetic switch.

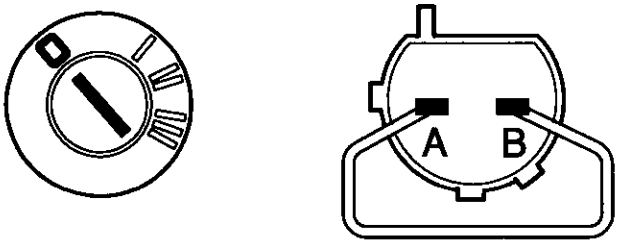

3600414A

960 1995-:

– Bridge item A and item B on the hood contact connectors.

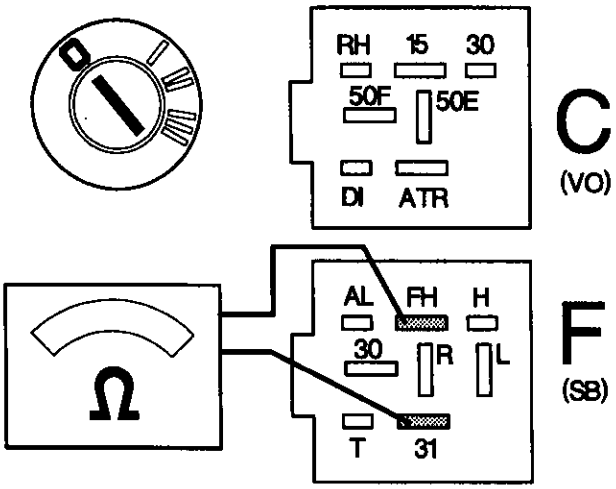

3600394A

– Connect an ohmmeter between item FH and item 31 on the alarm relay base.

The ohmmeter should show approx. 0 ohms.

If the reading is correct:

- Proceed to next page.

If the reading deviates:

There is a break in the lead from the hood contact to the engine compartment grounding point or in the lead from the hood contact to the alarm relay base item FH.

- Rectify the fault or renew the lead.
  Replace the alarm control module.
  Replace the hood contact lead or connector.

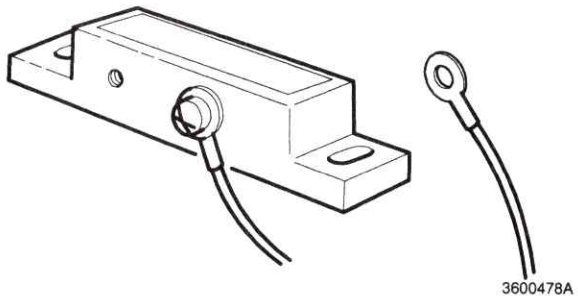

940 1993- and 960 1993-1994:
– Remove the bridge.

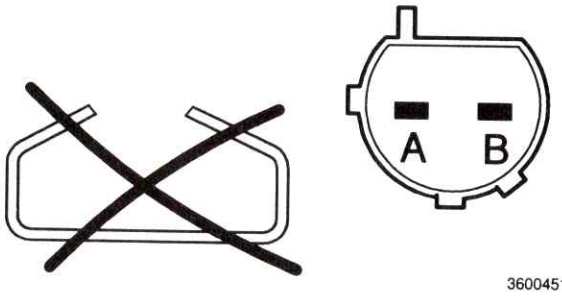

960 1995-:
– Remove the bridge.

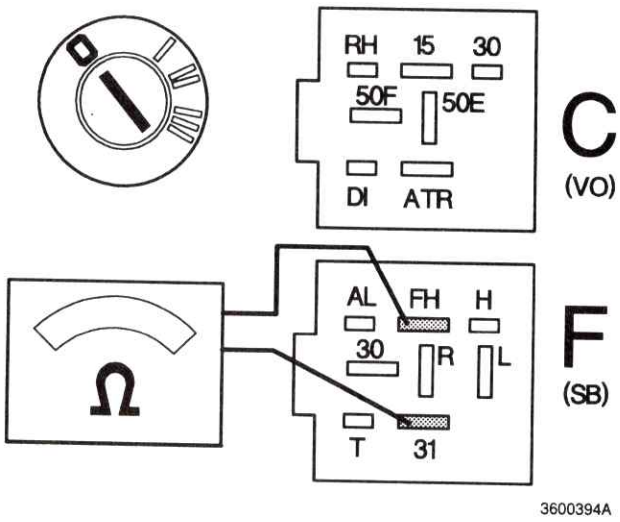

– Connect an ohmmeter between item FH and item 31. The ohmmeter should read infinity.

If the reading is correct:
- Proceed to C4.

If the reading deviates:

There is a short to earth in the signal lead between the hood contact and the alarm relay base item FH.
- Rectify the fault or renew the lead.
  Replace the alarm control module.
  Replace the hood contact lead or connector.

C4

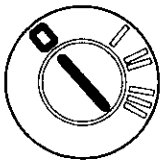

3000037A

Checking the hood contact

– Ignition off.

940 1993- and 960 1993-1994:

Check that the magnet in the hood is correctly positioned, i.e. that the magnet is correctly polarised in relation to the switch, and also that the distance between the magnet and the switch is correct.

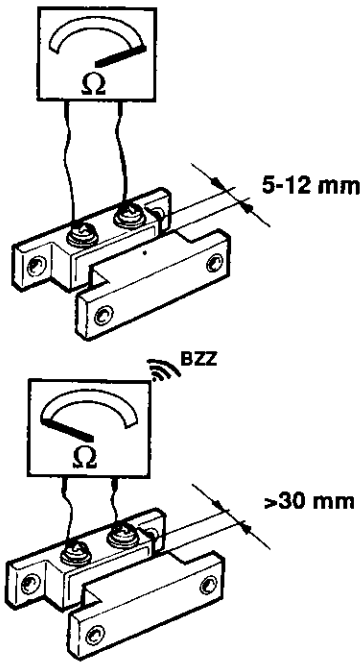

3900372S

Checking the magnet's position with respect to the magnetic switch

– Remove the magnet from the hood.
– Connect an ohmmeter to the magnetic switch.
– Move the magnet gradually towards the switch.

If the reading is correct:

If the gap is 5-12 mm the magnetic switch should be open, i.e. the ohmmeter should read infinite resistance.

If the gap is over 30 mm the magnetic switch should be closed, i.e. the ohmmeter should show approx 0 ohms (and there may be a buzzing sound).

If the reading deviates:

If, during the check, the ohmmeter shows no resistance, turn the magnet through 180° and repeat the test.

– When the correct position for the magnet in relation to the switch has been found, mark both items to ensure correct assembly.
– Refix the magnet on the hood and reconnect the leads.

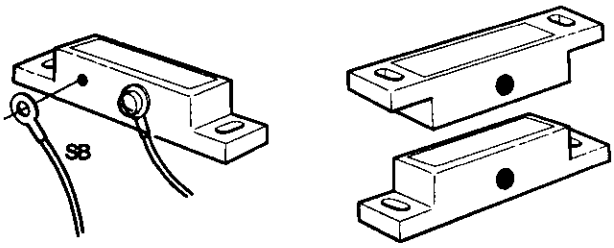

3600496A

Checking the distance between the magnet and the switch

– Place a lump of putty over the magnetic switch
– Close the hood.
– Open the hood and measure the gap in the putty between the magnet and the switch.
– If necessary, adjust the position of the magnet.

At a distance of 5-12 mm, the magnet and switch should be exactly opposite each other.

At a distance of 2-4 mm, the switch should move 5 mm sideways (this is so that the magnetic fields in the contacts do not cancel each other out).

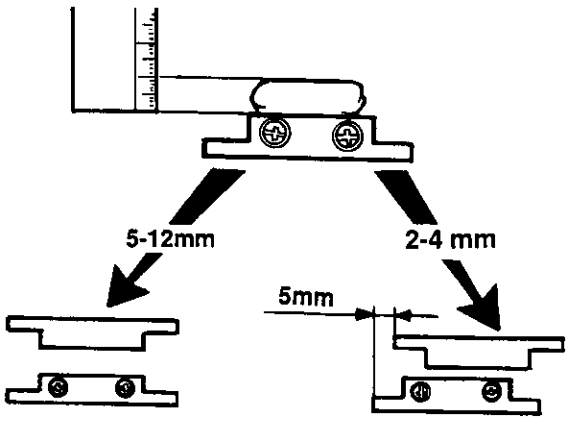

3900377S

Note: The widest permissible gap is 12 mm.

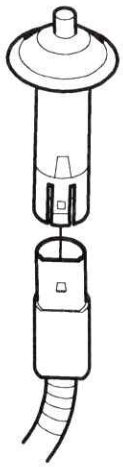

3600498A

960 1995-:

- Check that neither male nor female contacts in the hood are deformed or corroded.
- Replace the contacts to the hood.

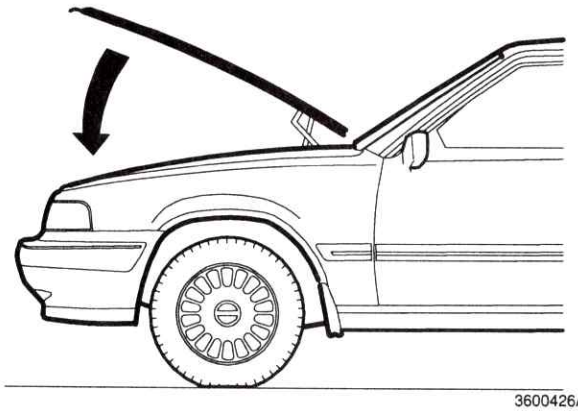

3600426A

940 1993- and 960 1993-1994:

960 1995-:

- Close the hood.

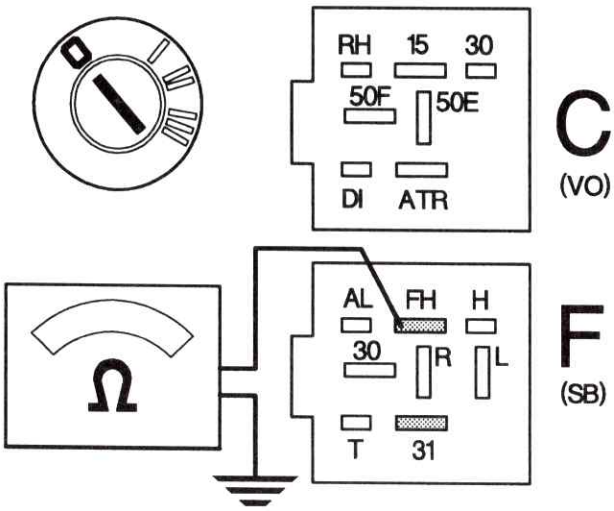

3600392A

- Connect an ohmmeter between ground and the alarm relay base item FH.

The ohmmeter should read infinity when the hood is closed.

If the reading is correct:

- Proceed to next page.

If the reading deviates:

There is a fault on the hood contact.

- Renew the hood contact.
  Replace the alarm control module.

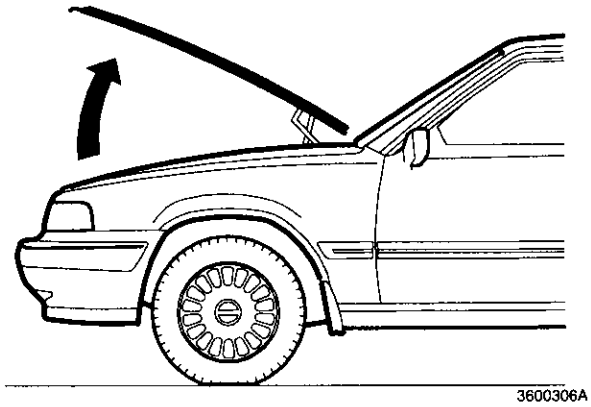

– Open the hood.

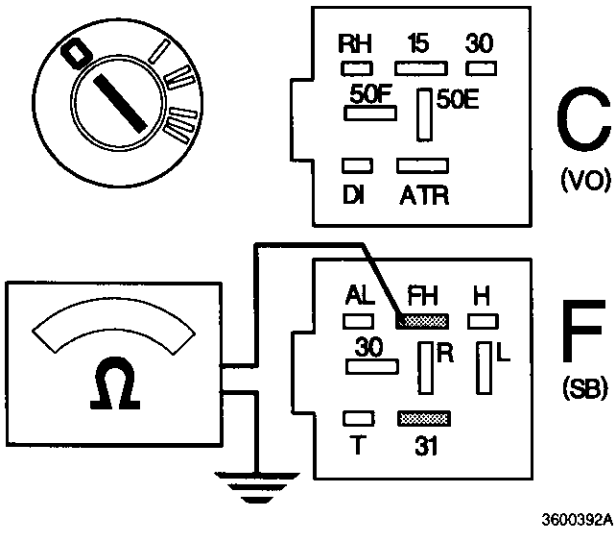

– Connect an ohmmeter between ground and the alarm relay base item FH.

The ohmmeter should show approx. 0 ohms when the hood is open.

If the reading is correct:

There is most likely a fault in the alarm control module.

- Carry out fault tracing as per Chapter P.

If the reading deviates:

There is a fault in the hood contact.

- Renew the hood contact.
  Replace the alarm control module.

D. No alarm on trunk lid

D1

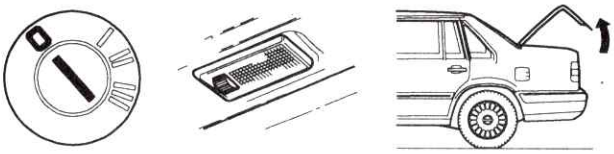

3600476A

Checking the trunk lid contact

– Ignition off.

– Open the trunk lid.
– Set the trunk light button to position "on".
The trunk light should come on.

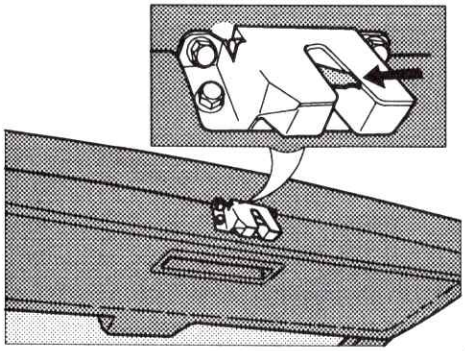

8300335A

4-door:

– Close the locking mechanism by forcing in the latch with a screwdriver.
The trunk light should go out.

(The catch is returned to open by pressing in the trunk opening button).

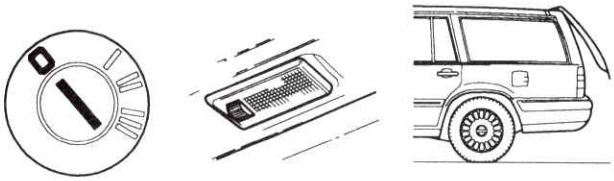

3600475A

5-door:

– Close the tailgate
The light should go out.

If both readings are correct:

940 1993- and 960 1993-1994:

- Continue with step D3.

960 1995-:

- Continue with step D2.

If the reading deviates:

- Check the tailgate contact (5-door) grounding for defects, e.g. corrosion, looseness or sticking.
- Investigate the trunk lighting.

D2

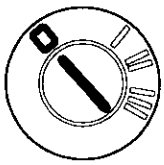

3000037A

Checking the trunk door contact.
Only 960 1995-

– Ignition off.

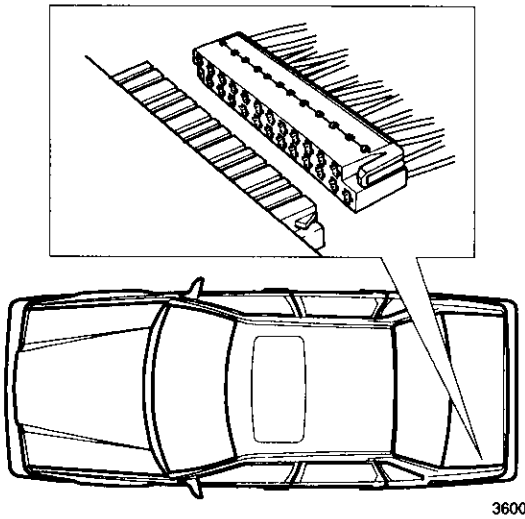

3600507A

– Remove the panels on the left hand side of the trunk.
– Disconnect the gray 24-pole connector A16.

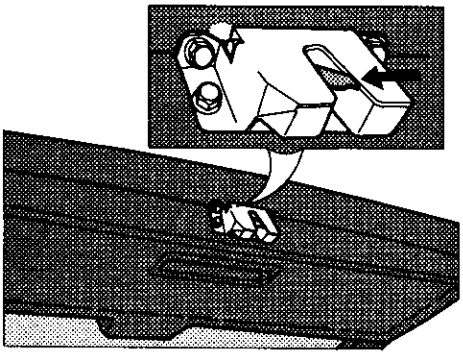

8300335A

4-door:

– Close the locking mechanism by pushing in the latch with a screwdriver.

5-door:

– Close the tailgate.

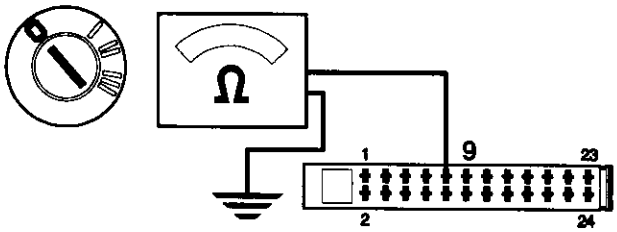

3600415A

– Connect an ohmmeter between ground and connector item 9.

The ohmmeter should read infinity.

If the reading is correct:

- Proceed to next page.

If the reading deviates:

There is a break to ground in the signal lead between the trunk light and the 24-pole connector A16 item 9. The ohmmeter should read infinity.

- Rectify the fault or renew the lead.

8300070A

4-door:

– Reset the latch to open by pressing the trunk lid button.

5-door

– Open the tailgate.

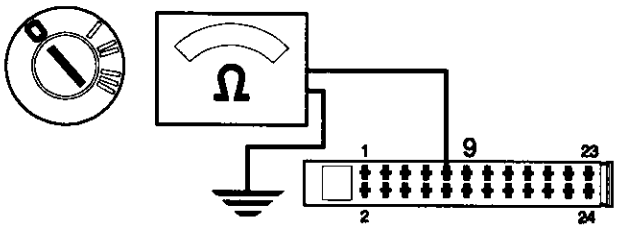

3600415A

– Connect an ohmmeter between item 9 and ground. The ohmmeter should read approx. 0 ohms.

If the reading is correct:

- Continue with step D3.

If the reading deviates:

There is a short to ground in the signal lead between the trunk light and the 24-pole connector A16 item 9.

- Rectify the fault or renew the lead.

D3

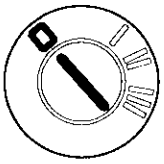

3000037A

Checking the signal lead

– Ignition off.

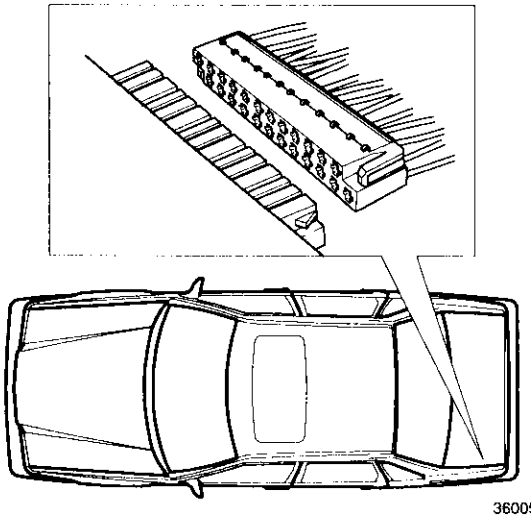

3600507A

Only 960 1995-:

– Plug in the 24-pole connector.

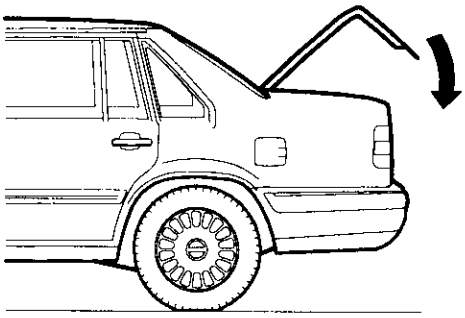

3600427A

940 1993- and 960 1993-1994:

960 1995-:

– Close the trunk.

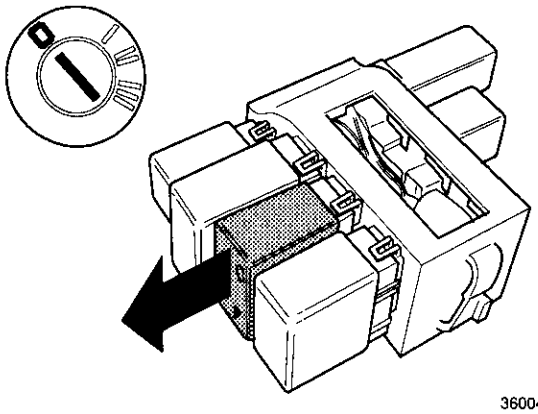

3600433A

– Remove the alarm control module (item C/F).

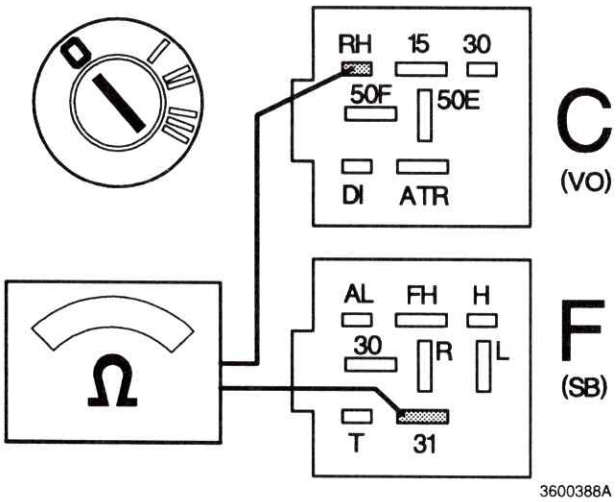

– Connect an ohmmeter between item RH and item 31 on the alarm relay base.

The ohmmeter should read infinity with the trunk lid closed.

If the reading is correct:

- Open the trunk lid and proceed with the next measurement.

If any reading deviates:

940 1993- and 960 1993-1994:

There is a short in the signal lead between the trunk light and the alarm relay base item RH.

960 1995-:

There is a short in the signal lead between the 24-pole connector A16 item 9 and the alarm relay base item RH.

- Rectify the fault or renew the lead.
  Replace the alarm control module.

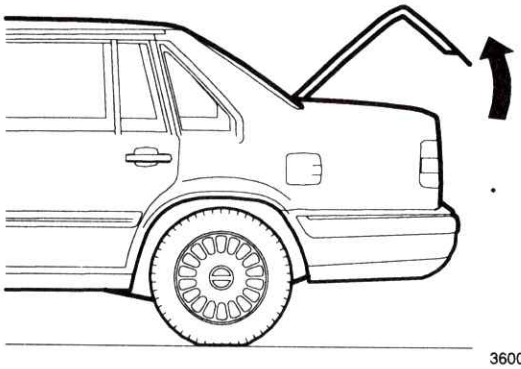

– Open the trunk lid.

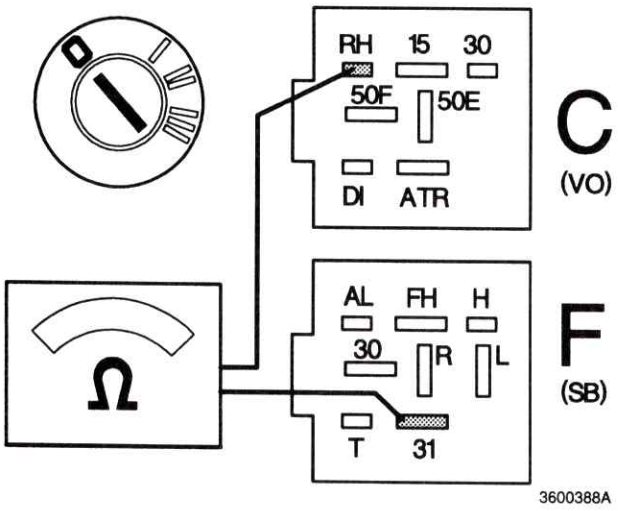

– Connect an ohmmeter between item RH and item 31.

The ohmmeter should read 0 ohms with the lid open.

If the reading is correct:

There is most likely a fault on the alarm control module.

- Proceed with fault tracing as per Chapter P.

If the reading deviates:

940 1993- and 960 1993-1994:

There is a break in the signal lead between the trunk light and the alarm relay base item RH.

960 1995-:

There is a break in the signal lead between the 24-pole connector A16 item 9 and the alarm relay base item RH.

- Rectify the fault or replace the lead.
  Replace the alarm control module.

E. No alarm when sensor activated (only Guard Alarm II)

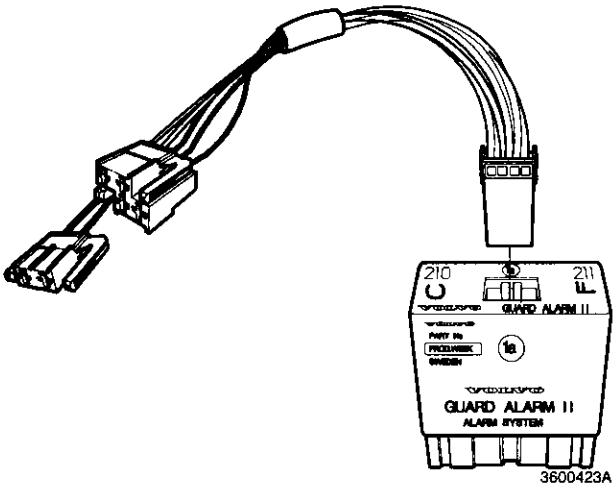

3600423A

Sensors are connected to Guard Alarm II's harness via the black 4-pole connector. The alarm is triggered when the lead at item 3 receives a ground signal, (which corresponds to item 5 on the control module 5-pole connector).

> **Note:**
> If several sensors are connected investigate one at a time.

E1

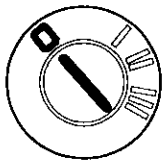
3000037A

Checking the sensor ground lead

– Ignition off.

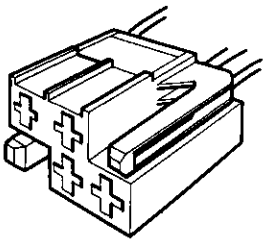
3900142A

– Detach the black 4-pole connector to the sensor.

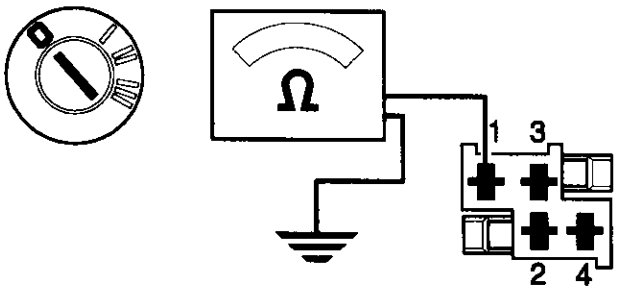

3600416A

– Connect an ohmmeter between ground and the insulated base item 1.

The ohmmeter should show approx. 0 ohms.

If the reading is correct:

- Continue with step E2.

If the reading deviates:

There is a break in the ground lead between the sensor 4-pole connector item 1 and the control module's 5-pole connector item 3.

- Rectify the fault or renew the lead.

E2

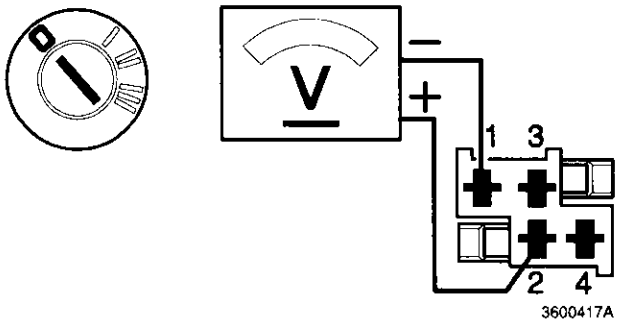

Checking the voltage feed to the sensor

– Ignition off.

– Connect a voltmeter between item 1 (ground) and item 2 on the black 4-pole connector.

The voltmeter should show battery voltage.

If the reading is correct:

- Continue with step E3.

If the reading deviates:

There is a break in the lead between the 4-pole connector item 2 and the 5-pole connector item 4 (situated on the top side of the alarm control module).

- Rectify the fault or renew the lead.

E3

Checking the signal lead from the sensor

– Ignition off.

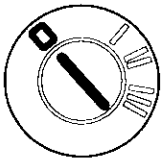

3000037A

– Activate the alarm.

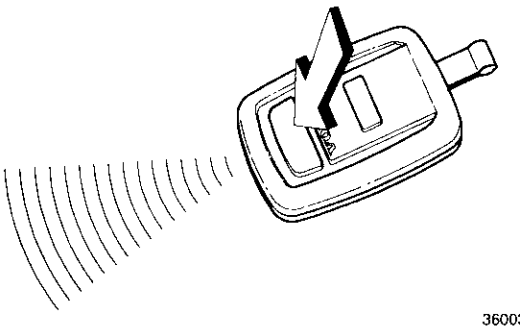

3600316A

– **Wait** at least 10 seconds.

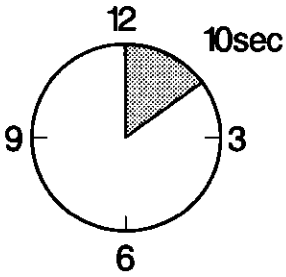

3600439A

– Bridge items 1 and 3 on the black 4-pole connector.

The alarm should be triggered.

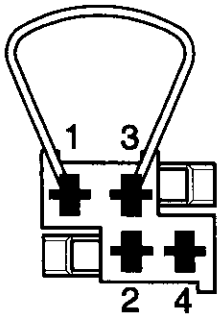

3600418A

If the reading is correct:

There is a fault on the sensor or a break in the sensor leads.

- Check connections as per RA1.
  Rectify the fault or renew the sensor.
  Replace the 4-pole connector.

If the reading deviates:

There is most likely a fault on the alarm control module.

- Follow the procedure given in Chapter P.

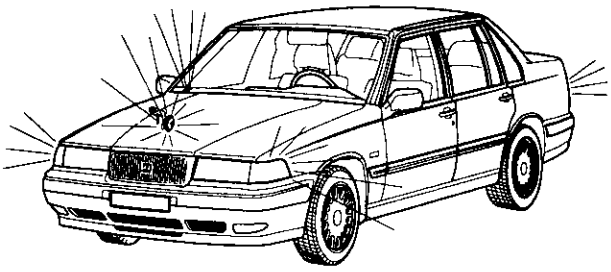

3600319A

F. False alarm

Note: It can often be difficult to establish which of the loops has caused the false alarm, since many faults are intermittent.

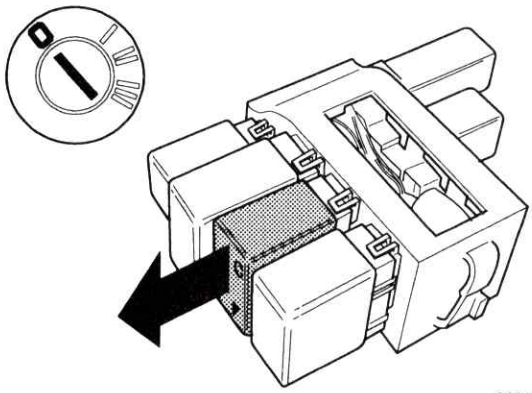

3600433A

For Guard Alarm II
Carry out a test of the 10 most recent alarms with the aid of the test box, see step QD.

F1

Disconnect the alarm loops
- Ignition off.
- Disconnect the alarm control module item (C/F).

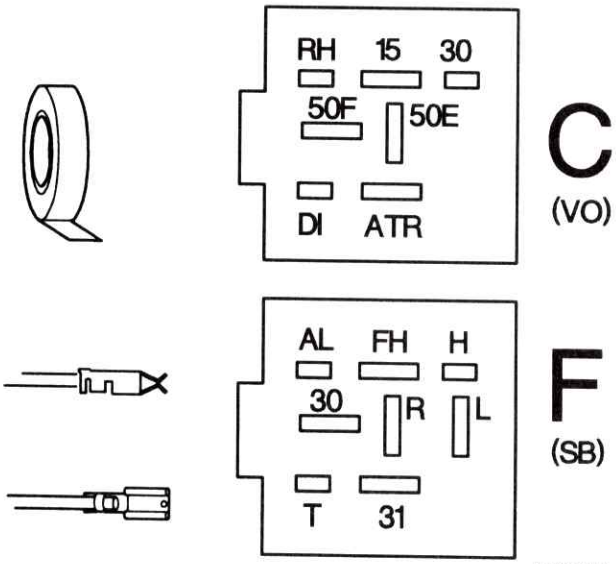

3600441A

- Check that all pins are in the correct position

- Disconnect all alarm loops except the ignition (15).
Do so by loosening the leads at the distribution box and insulate them with tape or fit insulators.

- The door contacts:
  Black/white lead at item T.

- The hood loop:
  Brown/white lead at item FH.

- The trunk loop:
  Blue/brown lead at item RH.

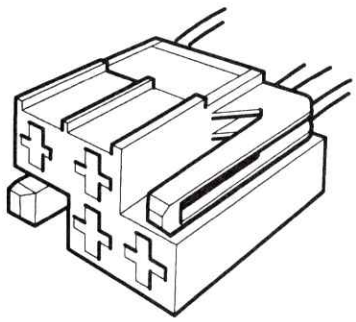

3900142A

- Sensor (only Guard Alarm II):
  Disconnect the black 4-pole connector to the sensor.

F2

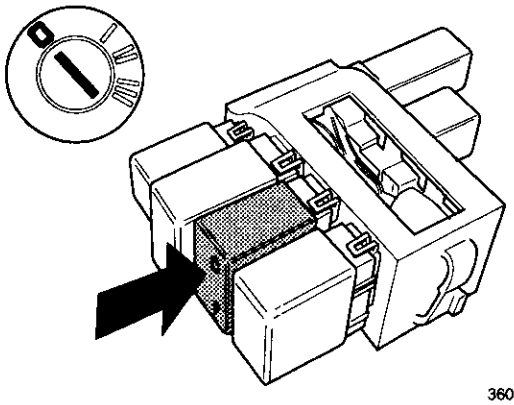

3600435A

See if false alarm reoccurs

– Ignition off.
– Reconnect the control module (item C/F).

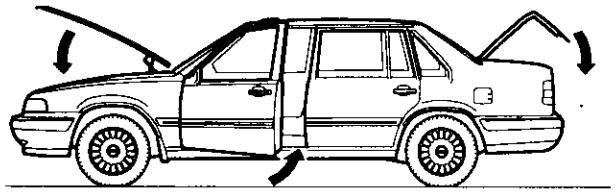

3600305A

– Close all doors, the hood and the trunk.

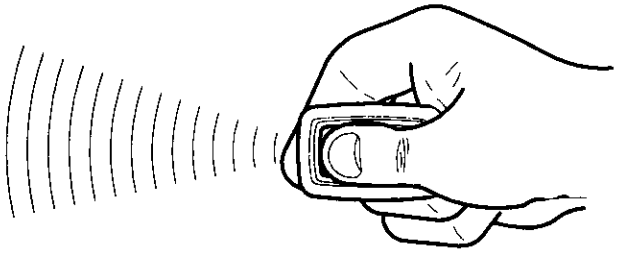

3600504A

– Activate the basic alarm or Guard Alarm II.

If the false alarm reoccurs:

The false alarm is the fault of the lead from the ignition feed, i.e. there is an intermittent 12 V short to item 15, e.g. through chafed leads, damp or dirty contact surfaces in the connectors of the ignition lock.

Only the basic alarm:

A false alarm may also be the result of intermittent shorting to 12 V (e.g. after hot-wiring) on the lead from the control module (50F) to the starter motor.

- Rectify the fault.

If the false alarm ceases:

- Connect one loop at a time until the faulty loop is revealed (the false alarm reoccurs).

The most frequent cause of the fault is intermittent shorting to ground, e.g. through chafed leads, damp or dirty contact surfaces in the connectors.

- Rectify the fault or replace the lead.

G. No horn when alarm triggered

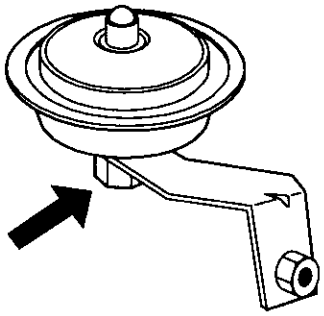

3900048A

Note:
The alarm cannot be triggered until 10 seconds after activation. To ensure perfect functioning, only the original horn should be used.
Do not loosen the nut between the mounting and the horn as this can influence the sound quality.

960 1995-:

Check fuse 14 before commencing fault tracing.

G1

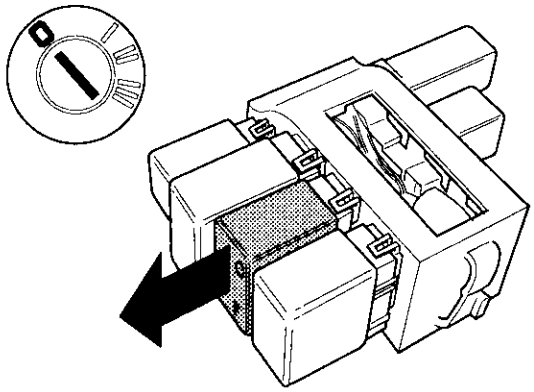

3600433A

Horn function check
- Ignition off.
- Disconnect the alarm control module (C/F).

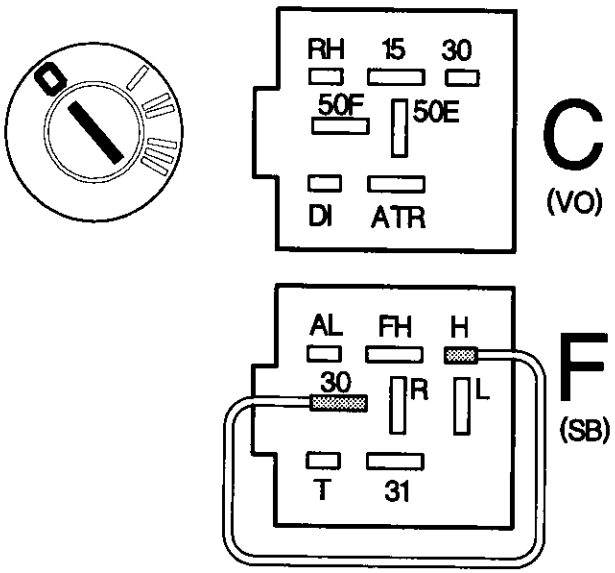

3600431A

- Bridge item H and item 30 on the alarm relay base.

The horn should sound.

If it sounds:

Fault most likely in the control module.
- Proceed with fault tracing as per Chapter P.

If horn does not work:
- Proceed to G2.

G2

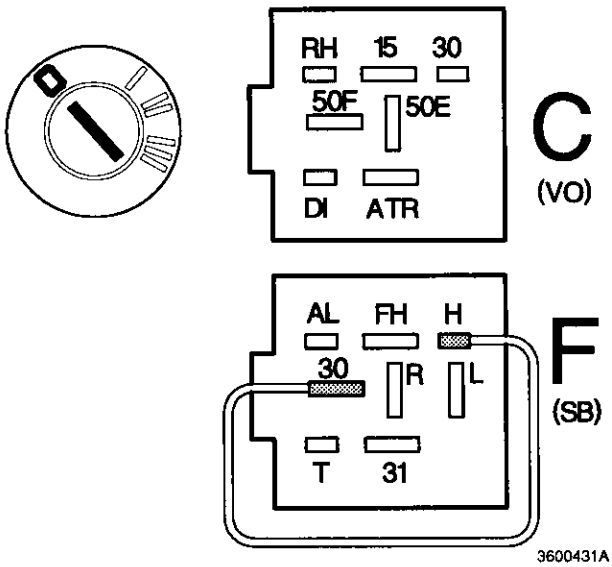

Checking signal lead

– Ignition off.

– Leave the bridge between item H and item 30.

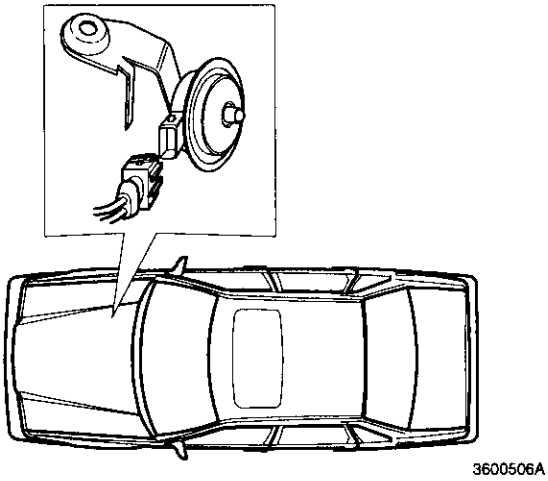

– Disconnect the 2-pole connector to the horn.

– Connect a voltmeter between ground and the horn connector item 1 (lead color BN/OR GR/W).

The voltmeter should read battery voltage.

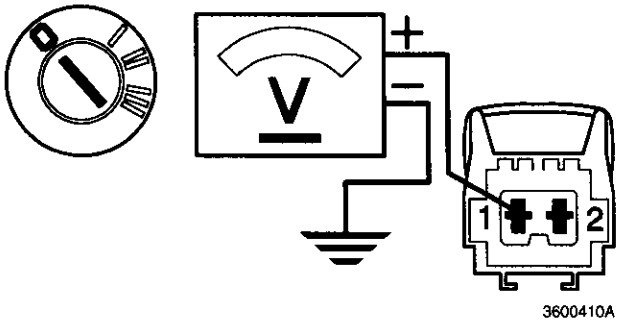

If the reading is correct:

- Continue with step G3.

If the reading deviates:

There is a break (or a short) in the lead between the alarm relay base item H and the horn contact item 1.

- Rectify the fault or renew the lead.
  Replace the alarm control module.
  Replace horn connector.

G3

3000037A

Checking ground lead

– Ignition off.

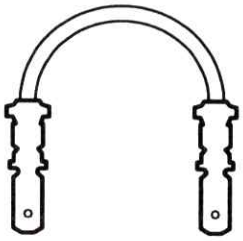

8300317A

– Remove bridge between item H and item 30.

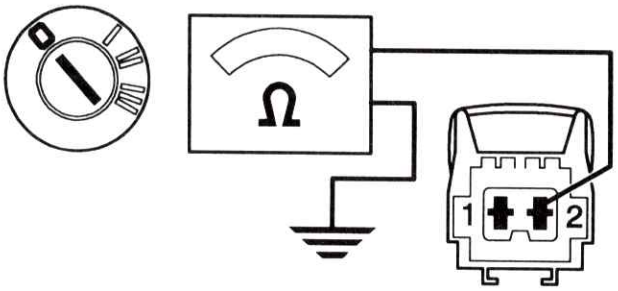

3600411A

– Connect an ohmmeter between ground and the horn connector item 2 (black lead).

The ohmmeter should show 0 ohms.

If the reading is correct:

There is a fault on the horn.

- Replace horn.

If the reading deviates:

There is a break in the black lead between the horn and ground.

- Rectify the fault or replace the lead.
  Replace the control module.
  Renew the horn connector.

H. No visual signal when alarm is triggered

Note:
The alarm cannot be triggered until 10 seconds after activation.

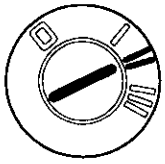

3000040A

H1

Functional check on turn signals

– Ignition on.

– Turn on the left and then right hand indicator.

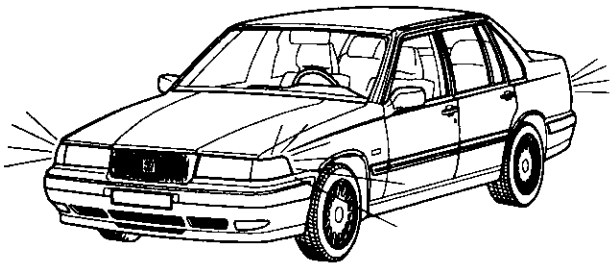

3600309A

The left or right indicator should flash.

If both are working:
- Continue with step H2.

If either does not work:
- Investigate left or right indicator.

H2

Checking the fuse

– Ignition off.
– Remove the fuse from the fuse box and check that it is undamaged.

940 1993-:	fuse 2
960 1993:	fuse 25
960 1994:	fuse 25
960 1995-:	fuse 17

8300064A

– Connect a voltmeter between ground and the fuse retainer.

Note: The illustration shows 960 1995-.

The voltmeter should show battery voltage.

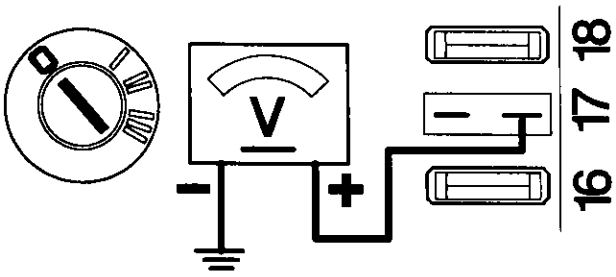

3600322A

If the reading is correct:
- Continue with step H3.

If reading deviates:

There is a break in the lead between the battery and the fuse in the fusebox.
- Rectify the fault or renew the lead.

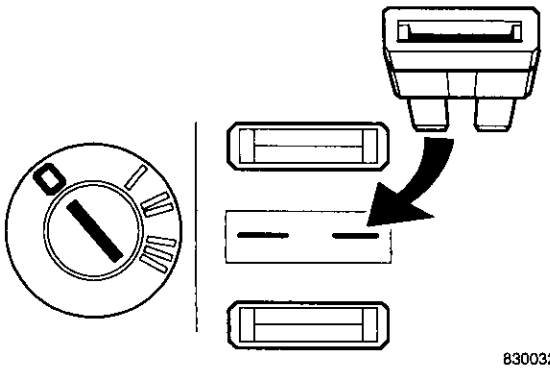

8300322A

H3

Checking the voltage feed to the visual alarm

– Ignition off.

– Renew the fuse in the fusebox.

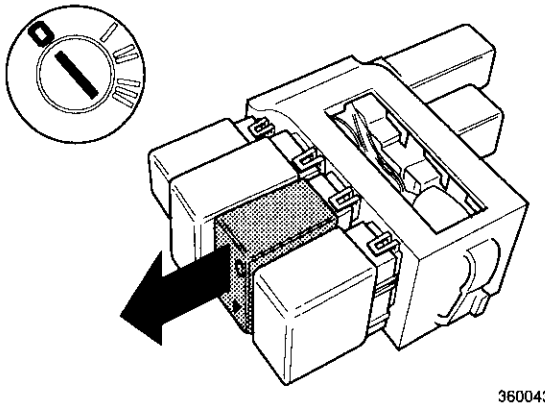

3600433A

– Disconnect the alarm control module (C/F).

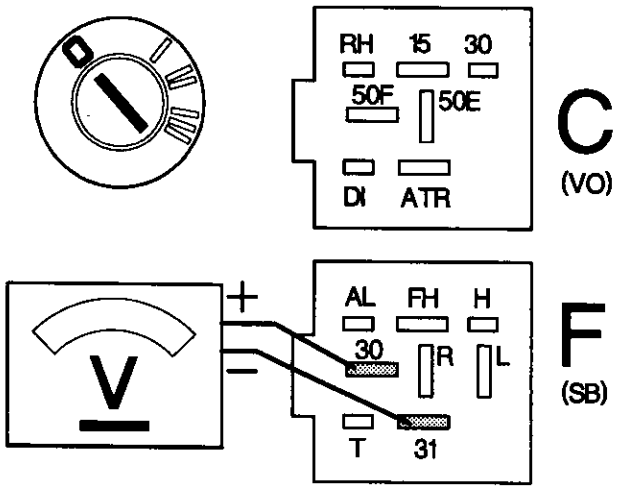

3600510A

– Connect a voltmeter between item 30 (base F) and item 31 on the alarm relay base.

The voltmeter should read battery voltage.

If the reading is correct:

- Continue with step H4.

If the reading deviates:

There is a break or a short to ground in the lead between the fuse and the alarm relay base item 30 (base F).

- Rectify the fault or renew the lead.
  Replace the control module.

H4

Checking the visual alarm

– Ignition off.

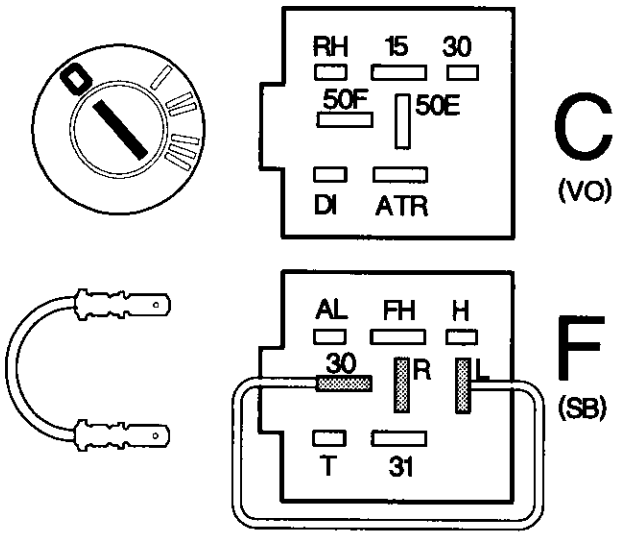

3600329A

Bridging L:
– Bridge item 30 (base F) and item L on the alarm relay base.
The left hand turn signal should light.

Bridging R:
– Move the bridge to between item 30 (base F) and item R.

The right hand turn signal should light.

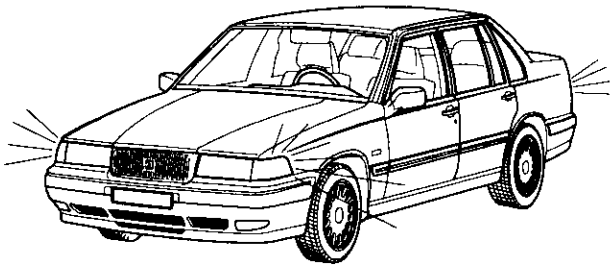

3600309A

If both are working:

There is most likely a fault on the control module.
- Follow the procedure described in Chapter P.

If either does not work:

There is a break between either the alarm relay base item L and the left hand turn signal or between the alarm relay base item R and the right hand turn signal.
- Rectify the fault or renew the lead
  Replace the control module.

J. The start inhibitor does not work

Car will start after alarm triggered

J1

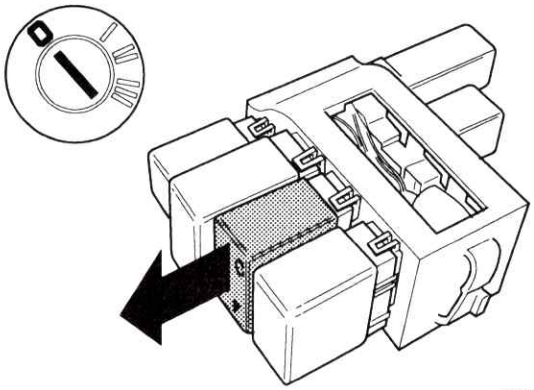

3600433A

Checking starter motor

- Ignition **off**.
- Disconnect alarm control module (item C/F).

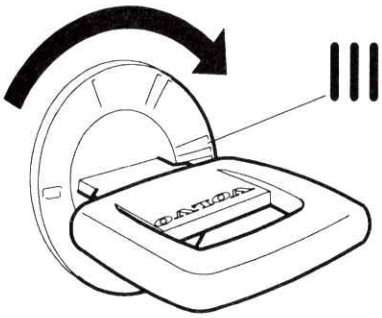

3900567A

- Start engine by turning ignition key to **position III**.

The starter motor should **not** work.

If it does not work:

- Continue with step J2.

If it does work:

There is a short between the lead to the alarm relay base item 50E and the lead to the alarm relay base item 50F.

- Investigate the starter motor electric system.

J2

Checking the ignition feed

- Ignition **off**.
- Remove fuse from fuse box and check that fuse is undamaged.

940 1993-:	fuse 12
960 1993:	fuse 14
960 1994:	fuse 21 or 23
960 1995-:	fuse 4

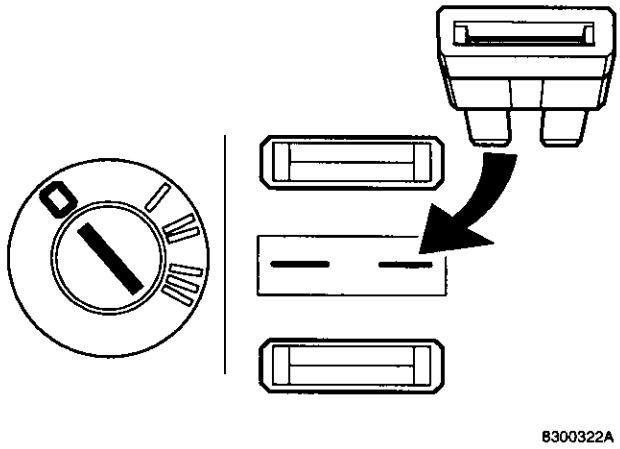

- Replace fuse.

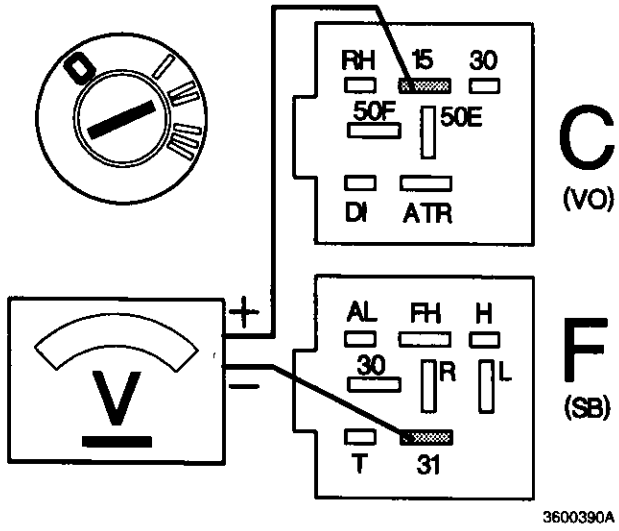

- Turn ignition to **position II**.

- Connect a voltmeter between item 15 and item 31 on the alarm relay base.

The voltmeter should show battery voltage.

If the reading is correct:

There is most likely a fault on the control module.

- Continue with procedure described in Chapter P.

If the reading deviates:

There is a break in the lead between the ignition lock and the alarm relay base item 15.

- Rectify the fault or renew the lead.
  Replace the alarm control module.

K. Start inhibitor does not disengage
Car will not start

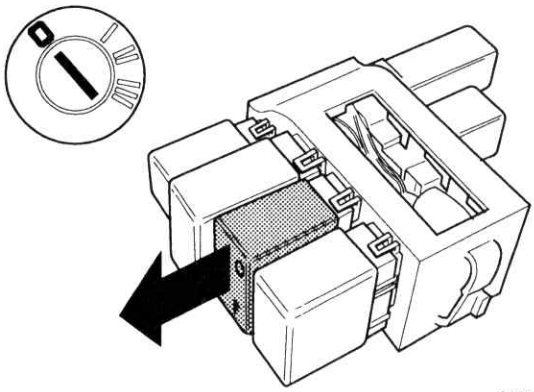

3600433A

K1

Checking starter motor

– Ignition **off**.
– Disconnect the alarm control module (item C/F).

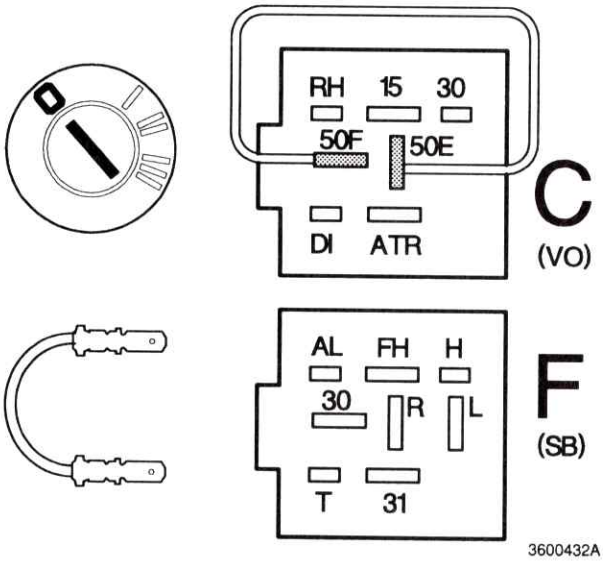

3600432A

– Bridge item 50E and item 50F on the alarm relay base.

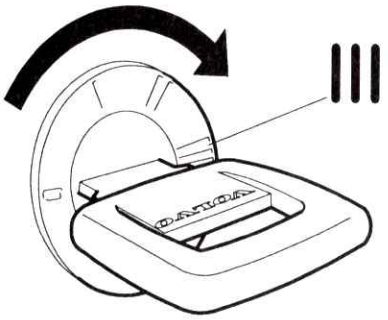

3900567A

– Start engine by turning ignition key to **position III**.
Starter motor should work.

If it does:

There is most likely a fault on the alarm control module.
- Carry out fault tracing as per Chapter P.

If it does not work:

There is a break in the lead between the ignition lock item 50 and the starter motor.
- Investigate the starter motor electric system.
  Replace the alarm control module.

L. Indicator LED faulty
Displays wrongly or not at all

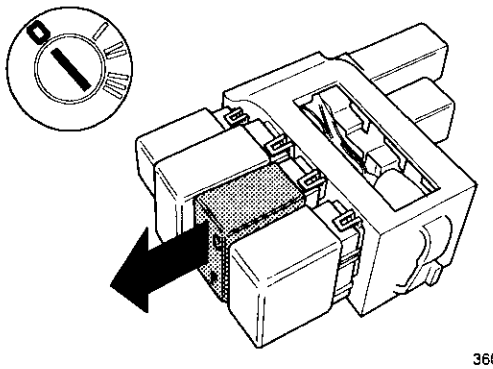

3600433A

Note:
The LED must not be fed with 12 V e.g. by bridging to the central relay.

960 1995-:

Check fuse 14 before commencing investigation.

L1

Checking the LED ground lead

- Ignition off.
- Disconnect the alarm control module (item C/F).

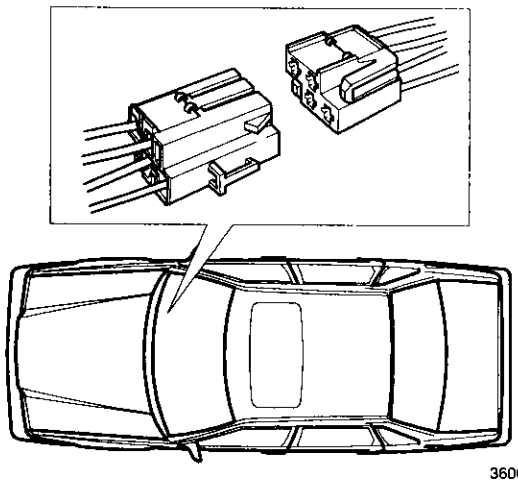

3600503A

- Disconnect the LED's connectors.

Note: The illustration shows the 4-pole connector 960 1995-.

- Connect an ohmmeter between ground and item 1 on the wiring harness 4-pole insulator.

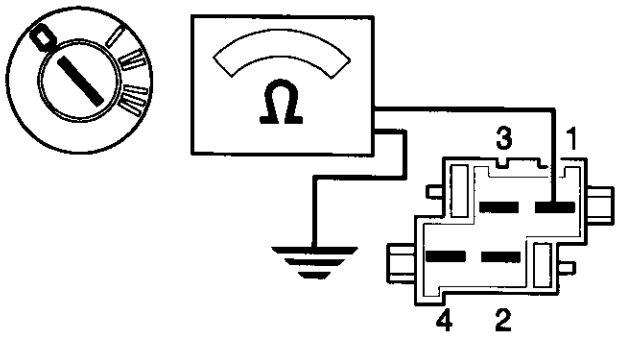

3600407A

Alternatively for Guard Alarm II:

- Connect an ohmmeter between ground and item 2 on wiring harness 2-pole yellow insulator.

Note: The illustration shows the 4-pole insulator 960 1995-.

The ohmmeter should show approx. 0 ohms.

If the reading is correct:

- Continue with step L2.

If the reading deviates:

There is a break in the LED ground lead.

- Rectify the fault or renew the lead.
  Replace the LED connector.

L2

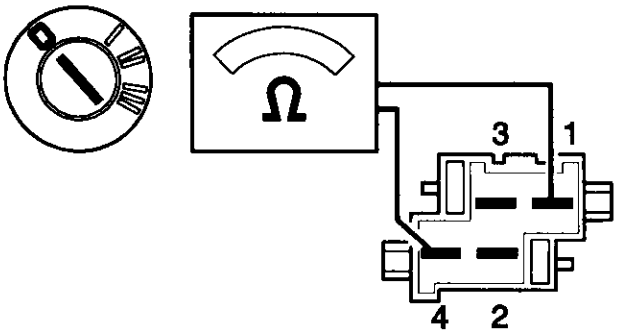

3600409A

Checking the LED signal lead

– Ignition off.

– Connect an ohmmeter between item 1 (ground) and item 4 on the wiring harness 4-pole insulator.

Alternatively for Guard Alarm II:

– Connect an ohmmeter between item 2 (ground) and item 1 on the wiring harness 2-pole yellow insulator.

Note: The illustration shows the 4-pole insulator 960 1995-.

The ohmmeter should read infinity.

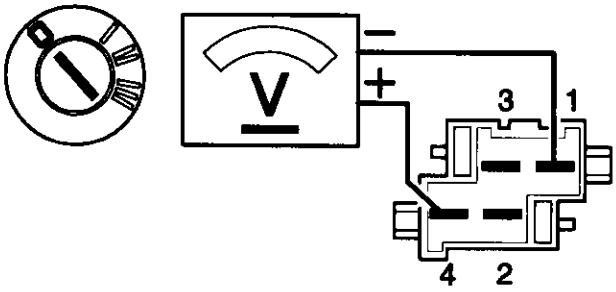

3600408A

Next connect a **voltmeter** as follows:

– Connect between item 1 (ground) and item 4 on the wiring harness 4-pole insulator.

Alternatively for Guard Alarm II:

– Connect voltmeter between item 2 (ground) and item 1 on wiring harness 2-pole yellow insulator.

Note: The illustration shows the 4-pole insulator 960 1995-.

The voltmeter should show 0 ohms.

If the reading is correct:

- Continue with step L3.

If the reading deviates:

There is a short to ground or 12 V on the signal lead between item DI and the LED connector.

- Rectify the fault or renew the lead.
  Replace the LED connector.

L3

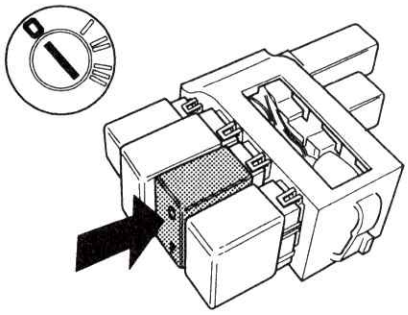

3600435A

Checking the LED current feed

- Ignition off.
- Reconnect alarm control module (item C/F).

8300069A

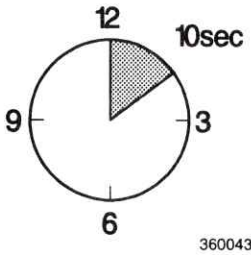

3600439A

- Activate the alarm.
- **Wait** at least 10 seconds.

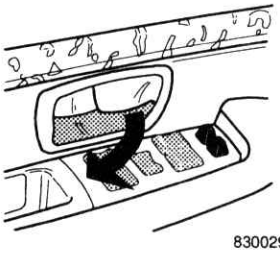

8300298A

8300070A

- Set off the alarm e.g. by opening a front door by means of the inner door handle.
- Deactivate the alarm.

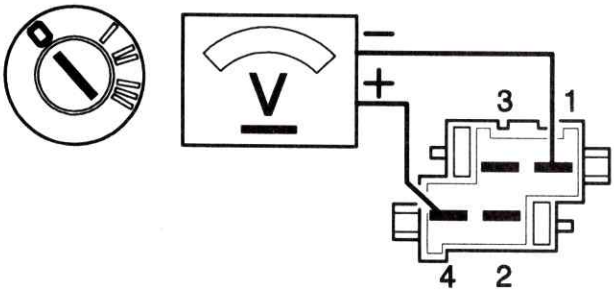

3600408A

- Connect a voltmeter between item 1 (ground) and item 4 on the wiring harness 4-pole insulator.

Alternatively for Guard Alarm II:

- Connect a voltmeter between item 2 (ground) and item 1 the wiring harness 2-pole yellow insulator.

Note: The illustration shows the 4-pole insulator 960 1995-.

The voltmeter should read at least 4 V.

If the reading is correct:

The LED is faulty.

- Check the connections as per step RA1. Renew LED.

If the reading deviates:

There is most likely a fault on the control module.

- Continue investigation as per Chapter P. Replace LED connector.

M. The basic alarm cannot be activated or deactivated

Note: First check whether the other remotes work and that the batteries are in order.

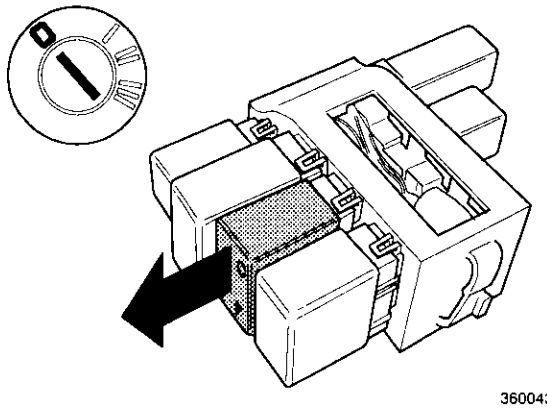

3600433A

Disabling the start inhibitor (only if necessary)

> **Note:**
> If the alarm is activated and cannot be deactivated, but the car has to be moved to a repair shop for fault tracing, the start inhibitor should be disabled.

1. Ignition off.
2. Disconnect the control module (item C/F).

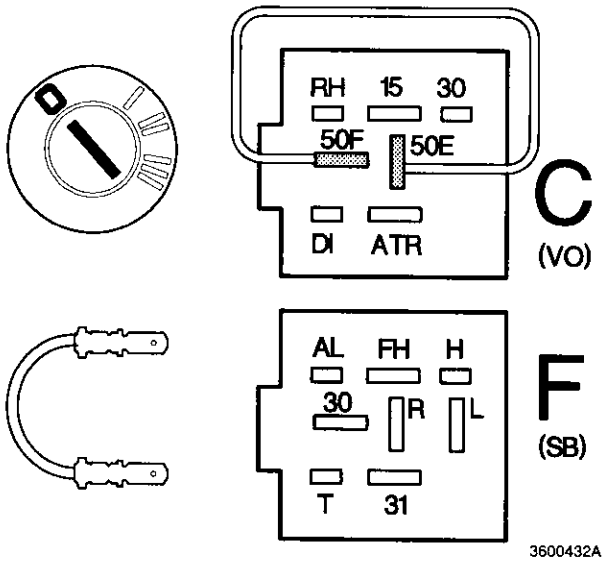

3600432A

3a. Bridge 50E and 50F on the alarm relay base.

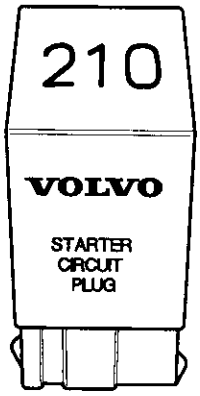

3600487A

3b. Alternatively use Starter Circuit Plug, P/N 3545333 which is inserted in the control module relay base C.

The start inhibitor will then be disabled.
(Starter will not work.)

- Commence fault tracing as per step M1.

M1

Checking central locking by remote control

– Ignition off.

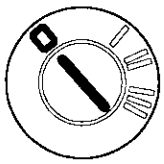

3000037A

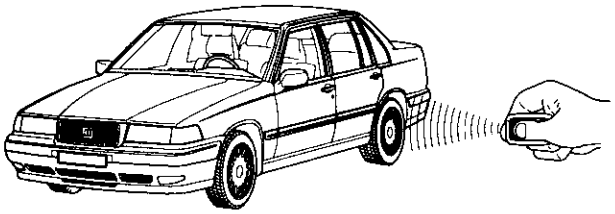

3600461A

– Operate the central locking by remote.

Note: Try both handsets.

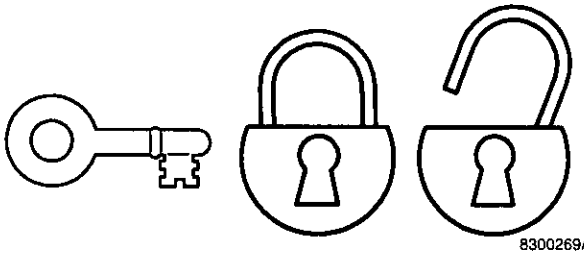

8300269A

It should be possible to lock and unlock.

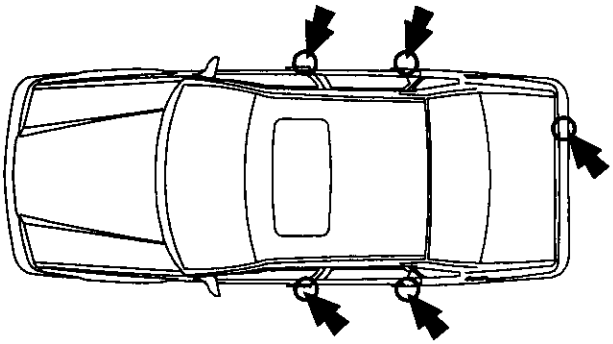

8300292A

If it works:

- Continue with step M2.

If it does not work:

Investigate central locking

- See service manual "Section 8 (83) Central locking 960 1995", section F.

M2

3000037A

Checking central locking by door key

– Ignition off.

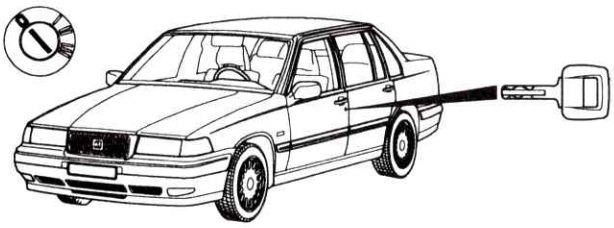

3600425A

– Operate central locking by means of the door key in driver's door.

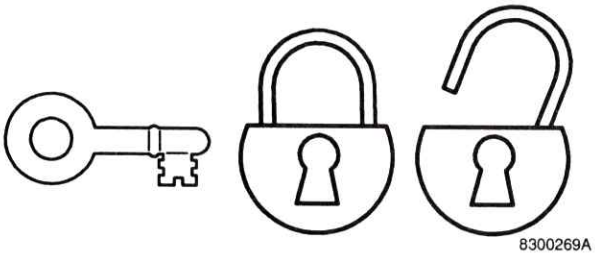

8300269A

The central locking should both lock and unlock.

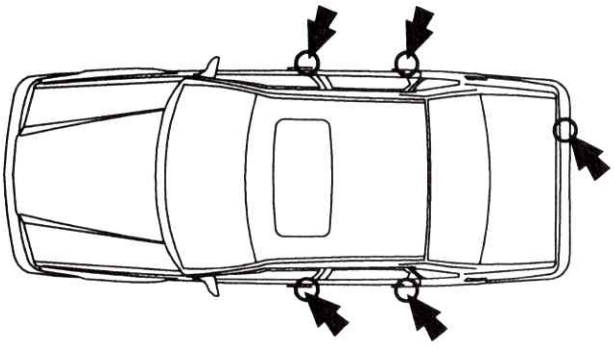

8300292A

If it works:

- Continue with step M3.

If it does not work:

Investigate central locking

- See service manual "Section 8 (83) Central locking 960 1995", section C.

M3

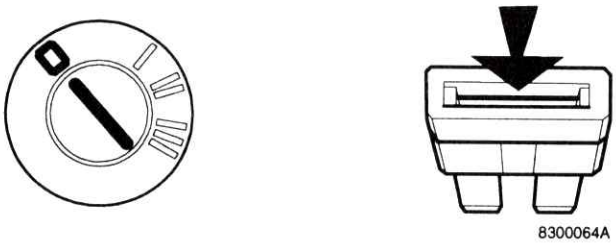

Checking fuse 14

- Ignition off.
- Remove fuse 14 from the interior fusebox and check that it is undamaged.

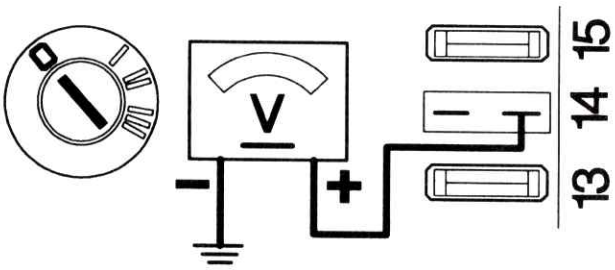

- Connect a voltmeter between ground and fuse holder 11C/14:1.

The voltmeter should read battery voltage.

If the reading is satisfactory:

- Continue with step M4.

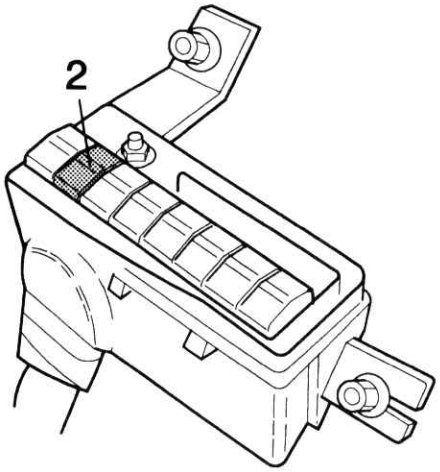

If the reading deviates:

There is a fault on main fuse 2 or a break in the lead from the main fuse 2 (11A/2).

- Rectify the fault, renew the fuse or lead.

M4

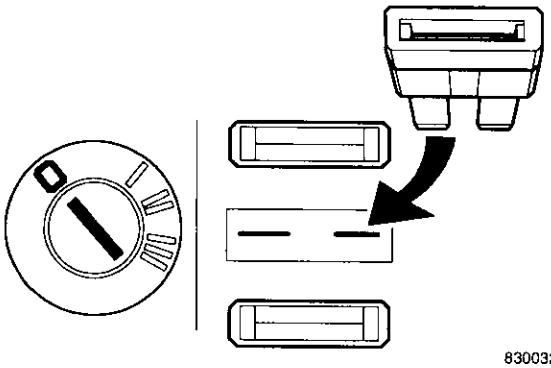

8300322A

Checking the ground lead to the alarm relay base

– Ignition off.
– Replace fuse 14 in fusebox.

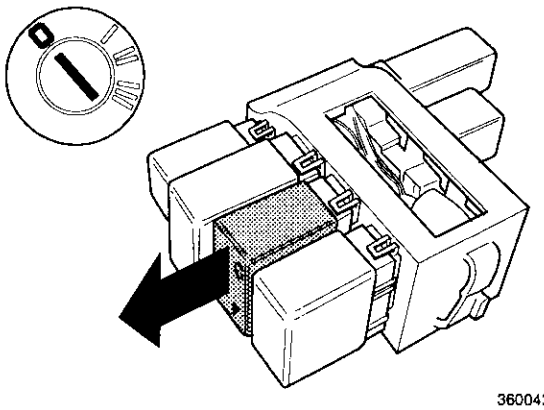

3600433A

– Disconnect alarm control module (item C/F).

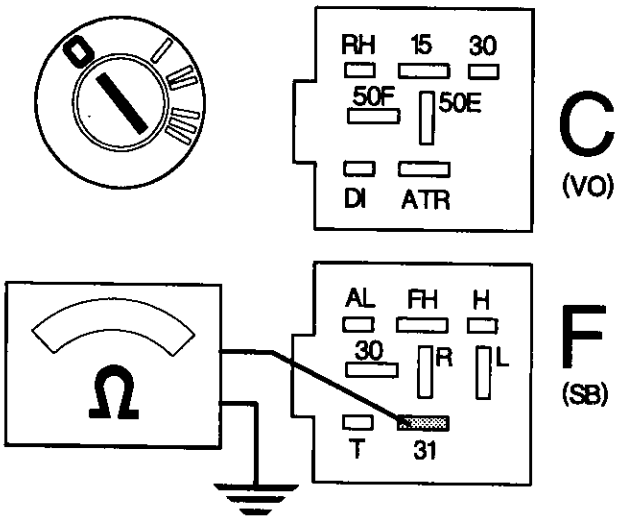

3600395A

– Connect an ohmmeter between ground and the alarm relay base item 31.

The ohmmeter should read approx. 0 ohms.

If the reading is correct:

- Continue with step M5.

If the reading deviates:

There is a break in the ground lead between the alarm relay base item 31 and the grounding point A-post 31/10.

- Rectify the fault or renew the lead.
  Replace the alarm control module.

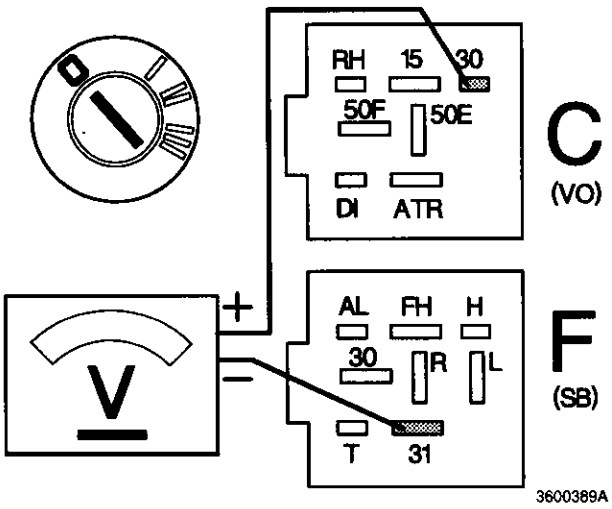

M5

Checking the voltage feed

– Ignition off.

– Connect a voltmeter between item 31 (ground) and item 30 (base C) on the alarm relay base.

The voltmeter should show battery voltage.

If the reading is correct:

- Continue with step M6.

If the reading deviates:

There is a break in the voltage feed between fuse 14 (11C/14:2) and the alarm relay base item 30 (base C).

- Rectify the fault or renew the lead.
  Replace the alarm control module.

M6

Checking the ignition feed

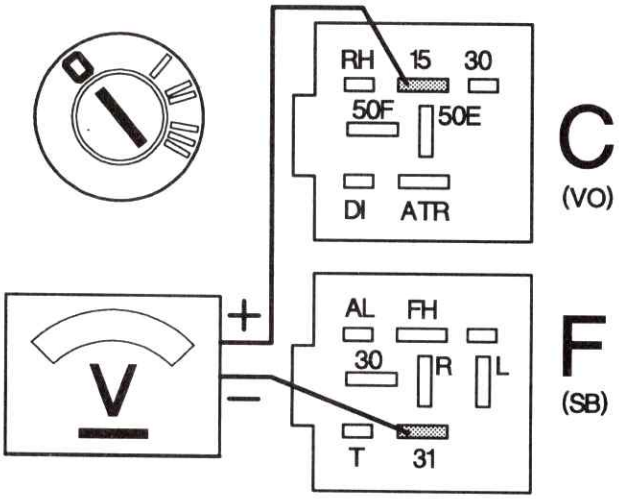

3600447A

Measurement A:

– Ignition **off**.

– Connect a voltmeter between item 15 and item 31 on the alarm relay base.

The voltmeter should show 0 V.

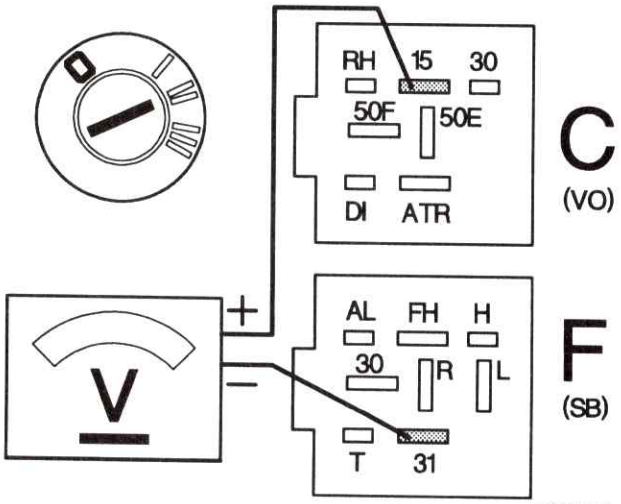

3600390A

Measurement B:

– Ignition **on**.

– Connect the voltmeter again between item 15 and item 31 on the alarm relay base.

The voltmeter should read battery voltage.

If both readings are correct:

- Continue with step M7.

If measurement A deviates:

There is a short to ground in the lead between the ignition lock item 15 A and the alarm relay base item 15.

- Rectify the fault or renew the lead.
  Replace the alarm control module.

If measurement B deviates:

There is a break in the lead between the ignition lock item 15A and the alarm relay base item 15. Alternatively fuse 4 in the fusebox has blown.

- Rectify the fault or renew the lead.
  Replace the alarm control module.

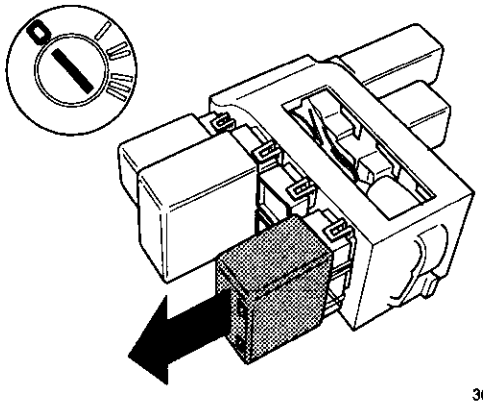

3600434A

M7

Checking the AT-switch in the driver's door locking assembly.

Note: In some markets, operation by door key may be disabled.

- Ignition off.
- Disconnect central locking relay (item D/G).

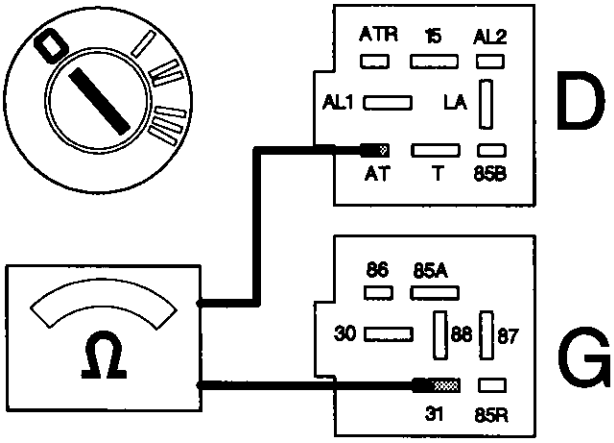

8300294A

- Connect an ohmmeter between item AT and item 31 on the **central locking** relay base.

The ohmmeter should read infinity.

- Maneuver the door lock 20° in one direction.
- Then maneuver the door lock 20° in the other direction.

The ohmmeter should show approx. 0 ohm in both cases.

Note: The AT-switch ground signal must appear before the central locking is maneuvered, i.e. a ground signal is obtained when it is turned approx. 20°. This ground signal must remain until the central locking is maneuvered, which occurs when turned approx. 40°.

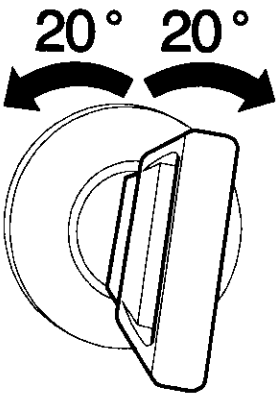

3600412A

If all readings are correct:

- Continue with step M8.

If there is some deviation:

There is a fault on the AT-switch in the driver's door lock assembly, or else a break in the signal lead or the ground lead to the AT-switch.

Alternatively the central lock may be maneuvered until the door key turns through 20°.

- Rectify the fault or renew the AT-switch, or leads.
  Replace the alarm control module.
  Replace the central locking relay.

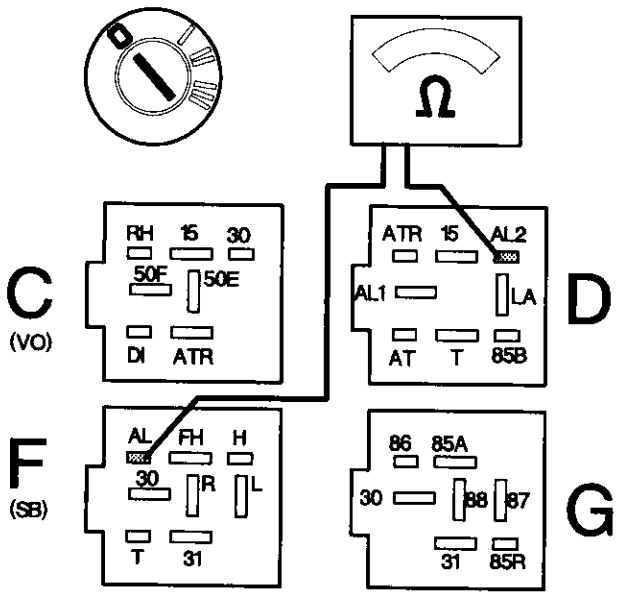

3600327A

M8

Checking the lead to the alarm control module

– Ignition off.

With an ohmmeter:

Check if there is a break in the signal lead:

– Connect an ohmmeter between the **alarm** relay base item AL and the **central locking** relay base item AL2.

The ohmmeter should show approx. 0 ohm.

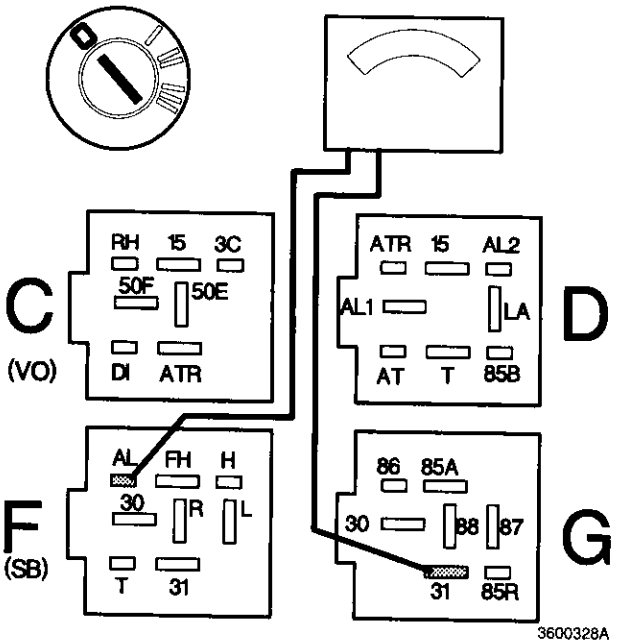

3600328A

With an ohmmeter:

Check if the signal lead is shorted to ground:

– Connect an ohmmeter between the **alarm** relay base item AL and the **central locking** relay base item 31.

The ohmmeter should show infinity.

With a voltmeter:

Check if the signal lead is shorted to 12 V:

– Connect a voltmeter between the **alarm** relay base item AL and the **central locking** relay base item 31.

The voltmeter should show 0 V.

If all readings are correct:

- Continue with step M9.

If there is a deviation:

There is a break or short in the signal lead between the **alarm** relay base item AL and the **central locking** relay base item AL2.

- Check connections as per RA1.
  Rectify the fault or renew the lead.
  Replace the alarm control module.
  Replace the central locking relay.

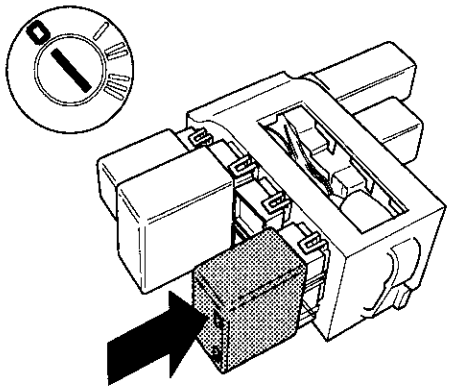

3600440A

M9

Checking the activation signal from the central locking relay

- Ignition off.
- Reconnect central locking relay (item D/G).

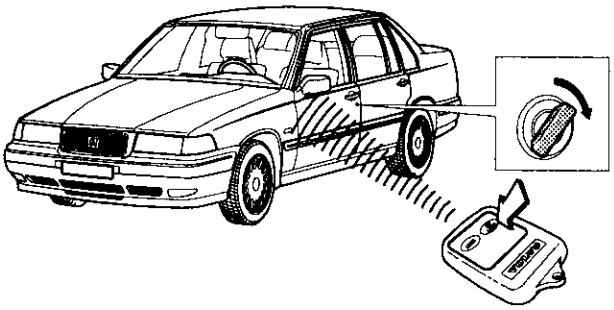

3600311A

- Deactivate with the remote
  or with the door key (not in certain markets).

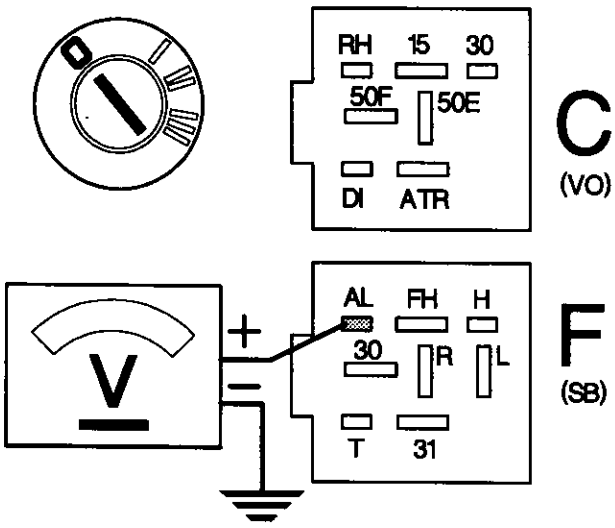

3600405A

- Connect a voltmeter between ground and the alarm relay base item AL.

The voltmeter should show less than 1 V.

If the reading is correct:

- Proceed to next page.

If there is a deviation:

The central locking relay is faulty.

- Renew the central locking relay.
  Replace the alarm control module.

M. The basic alarm cannot be activated or deactivated

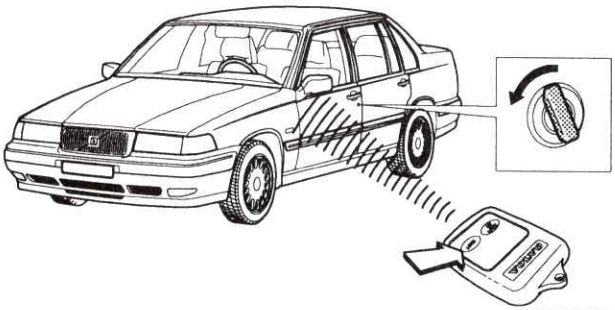

3600302A

– Activate the alarm with the remote or with the door key (not in some markets).

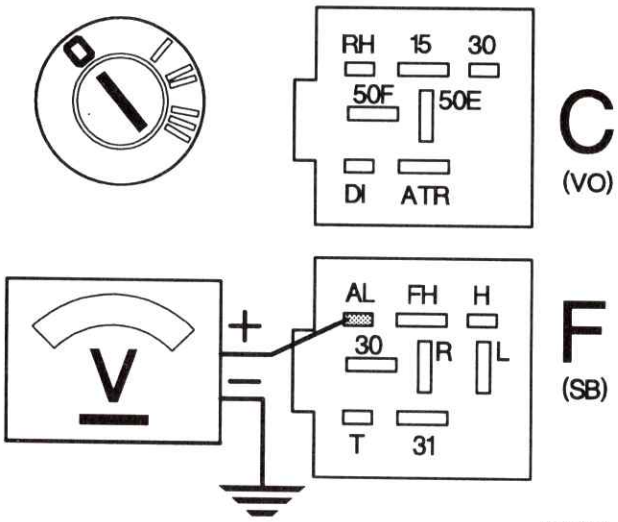

3600405A

– Connect a voltmeter between ground and the alarm relay base item AL.

The voltmeter should show a minimum of 4 V.

If the reading is correct:

There is most likely a fault on the alarm control module.

- Investigate as described in Chapter P.

If there is a deviation:

There is a fault on the central locking relay.

- Renew the central locking relay.
  Replace the alarm control module.

N. Guard Alarm II cannot be activated or deactivated

Note: First check that the other remotes work and that the remote batteries are in order.

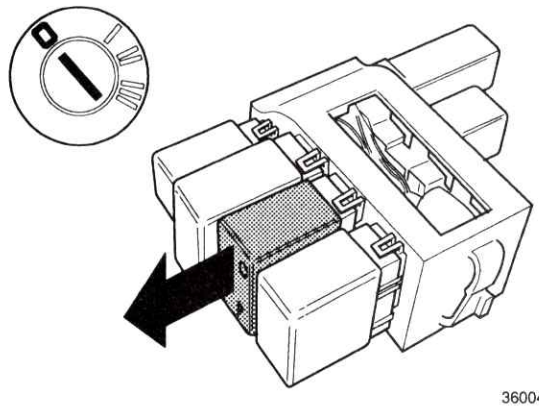

3600433A

Disabling the start inhibitor (only if necessary)

> **Note:**
> If the alarm is activated and cannot be deactivated with any of the remotes, the car must be taken to a workshop to trace the fault. In which case disable the start inhibitor.

1. Ignition off.
2. Disconnect the alarm control module (item C/F).

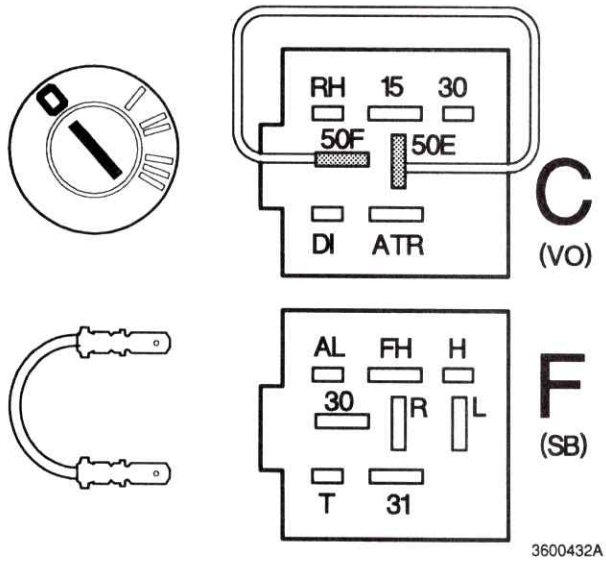

3600432A

3a. Bridge 50E and 50F on the alarm relay base.

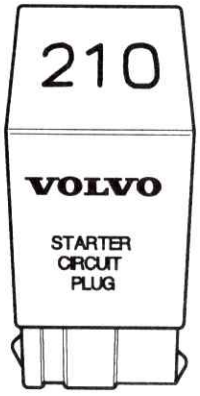

3600487A

3b. Alternatively use Starter Circuit P/N 3545333, which is placed in the control module relay base C.

The start inhibitor will then be disabled.
(Starter will not work.)

- Commence fault tracing as per step N1.

N1

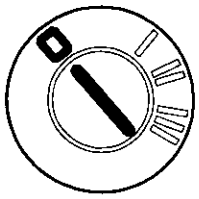

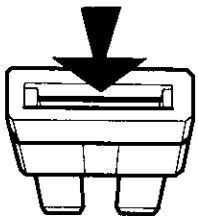

8300064A

Checking battery feed

- Ignition off.
- Remove the fuse from the fusebox and/or fuse DD11 fitted to the alarm wiring harness and check that it is undamaged.

940 1993-:	fuse DD11 on the alarm wiring harness
960 1993:	fuse 26 and fuse DD11 on the alarm wiring harness
960 1994:	fuse DD11 on the alarm wiring harness
960 1995-:	fuse 14

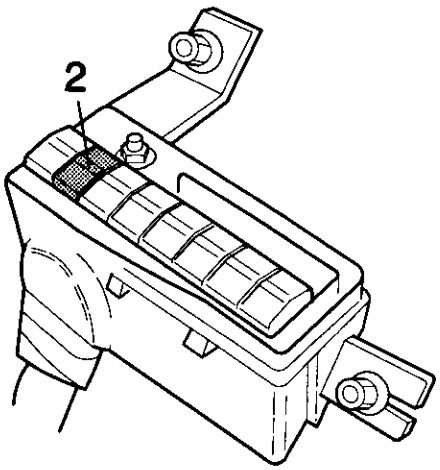

3600509A

Only 960 1995-:

Check also that main fuse 2 (11A/2) is intact.

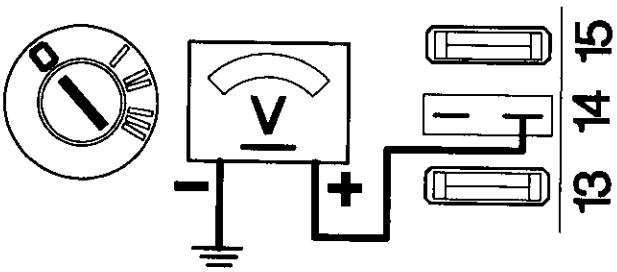

3600321A

- Connect a voltmeter between ground and fuse retainer.

Note: The illustration shows 960 1995-.

The voltmeter should show battery voltage.

If the reading is correct:

- Continue with step N2.

If there is a deviation:

There is a break in the lead between the battery and the fuse.

- Rectify the fault, or renew the lead.

N2

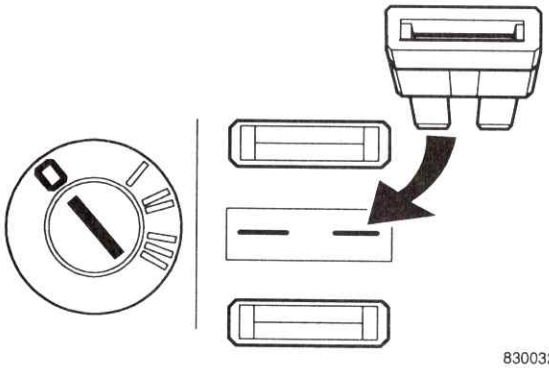

Checking the lead to the alarm relay base

- Ignition off.
- Replace the fuse in the fusebox.

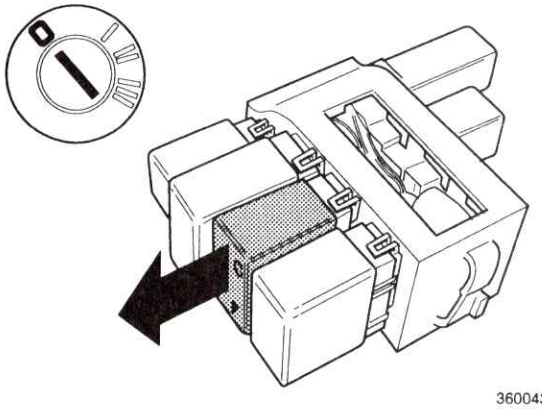

- Disconnect the alarm control module (item C/F).

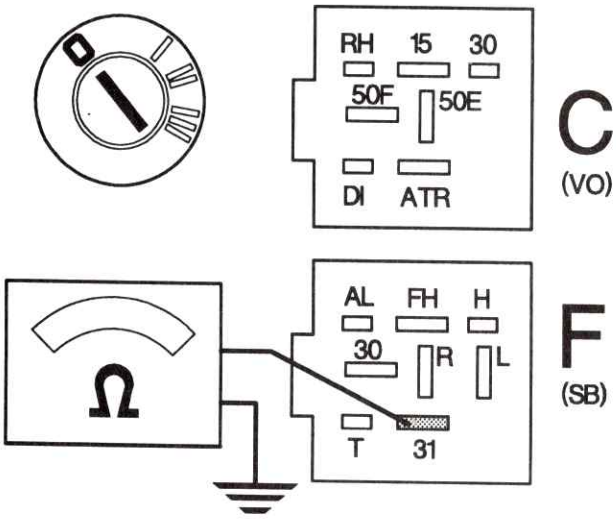

- Connect an ohmmeter between ground and the alarm relay base item 31.

The ohmmeter should show approx. 0 ohms.

If the reading is correct:

- Continue with step N3.

If the reading deviates:

There is a break in the ground lead between the alarm relay base item 31 and ground.

- Rectify the fault or renew the lead.
  Replace the alarm control module.

N3

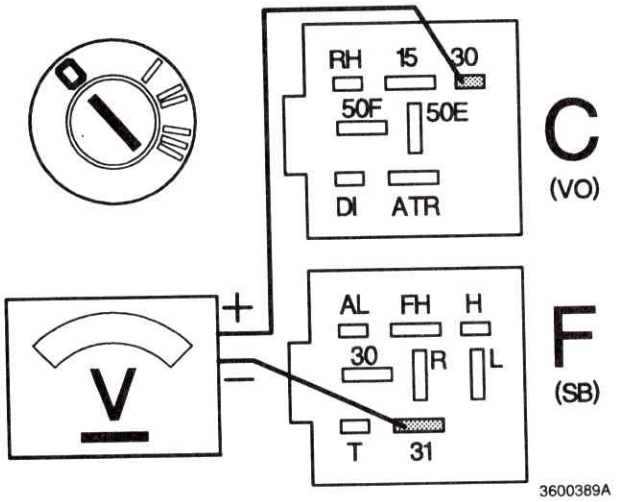

Checking the voltage feed

– Ignition off.

– Connect a voltmeter between item 31 (ground) and item 30 (base C) on the alarm relay base.

The voltmeter should show battery voltage.

If the reading is correct:

- Continue with step N4.

If the reading deviates:

There is a break in the voltage feed between the fuse and the alarm relay base item 30 (base C).

- Rectify the fault or renew the lead.
  Replace the alarm control module.

N4

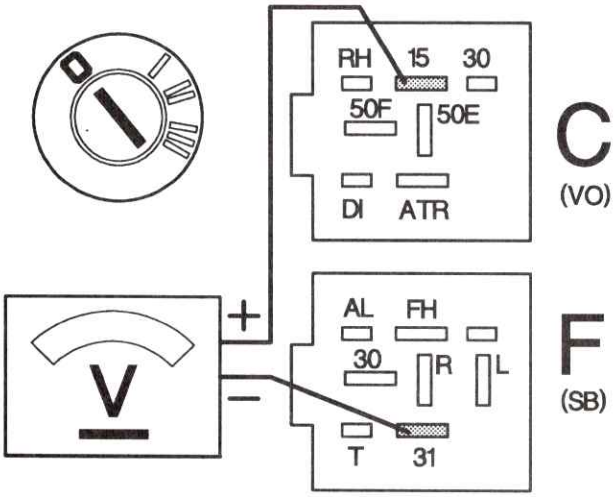

3600447A

Checking the ignition feed

Measurement A:

– Ignition **off.**

– Connect a voltmeter between item 15 and item 31 on the alarm relay base.

The voltmeter should show 0 V.

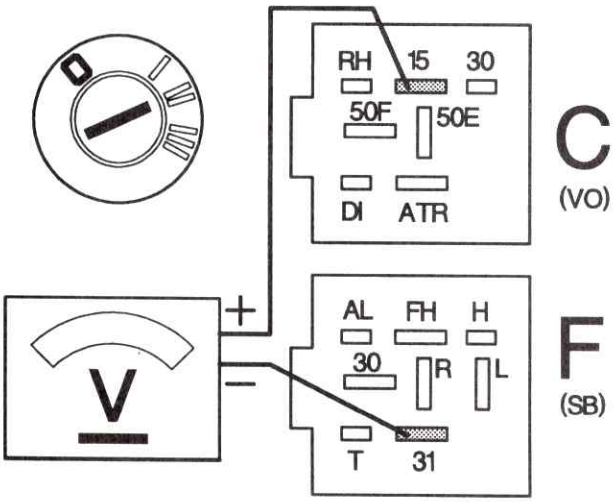

3600390A

Measurement B:

– Ignition **on.**

– Connect the voltmeter again between item 15 and item 31 on the alarm relay base.

The voltmeter should show battery voltage.

If both readings are correct:

- Continue with step N5.

If measurement A deviates:

There is a short to ground in the lead between the ignition lock and the alarm relay base item 15.

- Rectify the fault or renew the lead.
  Replace the alarm control module.

If measurement B deviates:

There is a break in the lead between the ignition lock item 15A and the alarm relay base item 15, or the fuse in the fusebox may be blown.

940 1993-:	fuse 12
960 1993:	fuse 14
960 1994:	fuse 21 or 23
960 1995-:	fuse 4

- Rectify the fault or renew the lead.
  Replace the alarm control module.

N5

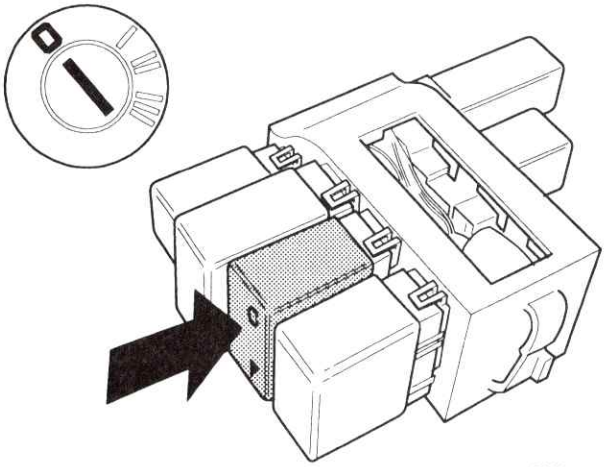

3600435A

Changing batteries in both handsets

- Ignition off.
- Reconnect the alarm control module (item C/F).

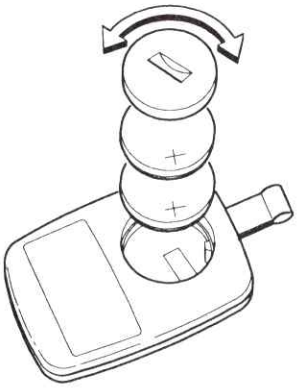

3600318A

- Remove the batteries from the handsets.
- Change the batteries. 2 batteries type CR 1220 (3 Volt).

> **Note:**
> Batteries contain elements harmful to the environment. They should not be discarded with normal garbage.

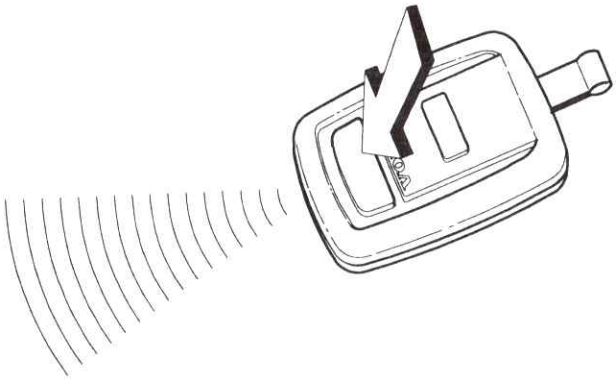

3600316A

- Test both handsets.

If one of the handsets works correctly:

- Exchange the defective control and program both with the key code, see page 28.

If neither handset works:

- Continue with step N6.

N6

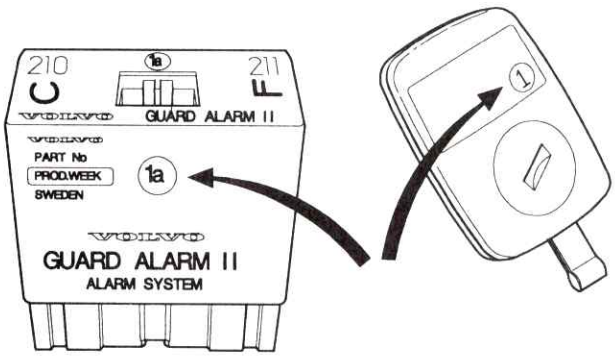

3600480A

Programming key codes

– Check that the handsets both have the same coding as that marked on the control module (compare only the figures).

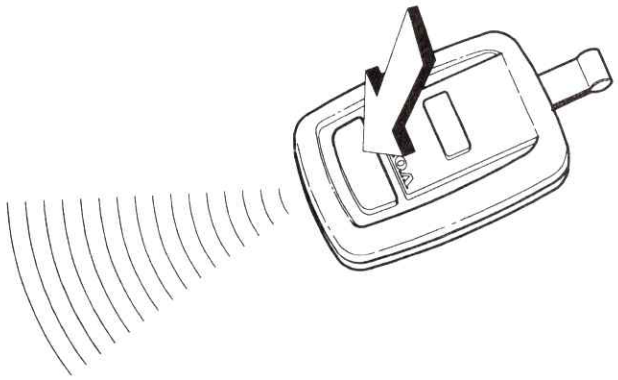

3600316A

– Program in the key code on all handsets which are to be used, see page 28.

8300269A

– Test the handsets.
The handsets should activate and deactivate the alarm.

If they still do not work:

Proceed as follows:

1. Try a new handset.
(Mark the new handset temporarily with e.g. tape.)

Program in the key code, see page 28.

– Test the remote.
If it still does not work, proceed to 2.

2. Investigate the fault as per Chapter P
(in case it is necessary to change the control module).

Program all handsets with the key code, see page 28.

Test all handsets to see if any are defective.

P. Fault tracing on the alarm wiring

All inputs and outputs are protected against 12 V and grounding.

Check the following before the control module is exchanged:

The following pertains to both the basic alarm and Guard Alarm II

P1

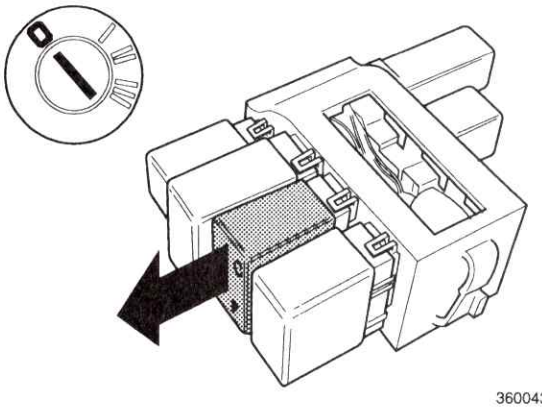

3600433A

Check the connections

- Ignition off.
- Disconnect the alarm control module (item C/F).

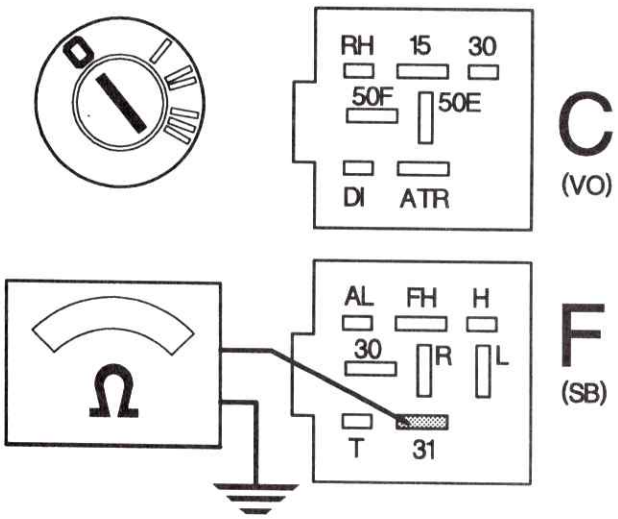

3600395A

Check that item 31 is connected to ground

- Ignition off.
- Connect an ohmmeter between ground and the alarm relay base item 31.

The ohmmeter should show approx. 0 ohms.

If the reading is correct:

- Proceed to next page.

If the value deviates:

Item 31 is not grounded.

- Check connections as per step RA1. Rectify the fault or renew the lead.

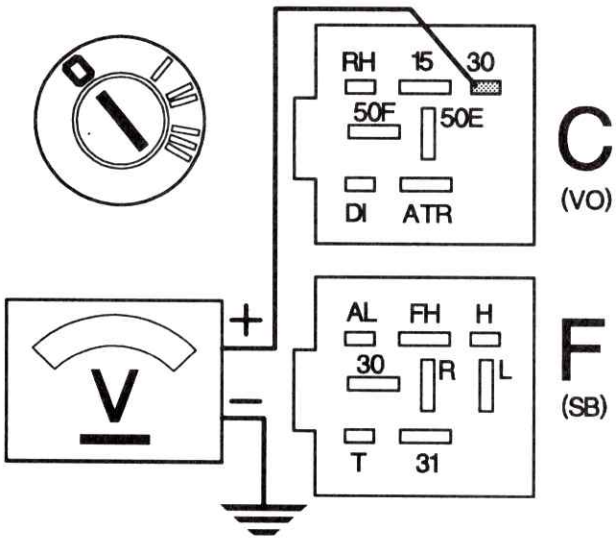

3600404A

Check that item 30 is connected to battery voltage.

– Ignition off.
– Connect a voltmeter between ground and the alarm relay base item 30 (base C).

The voltmeter should show battery voltage.

If the reading is correct:

- Proceed to next measurement below.

If the reading deviates:

Voltage is missing at item 30.

- Check connections as per step RA1.
  Rectify the fault or renew the lead.

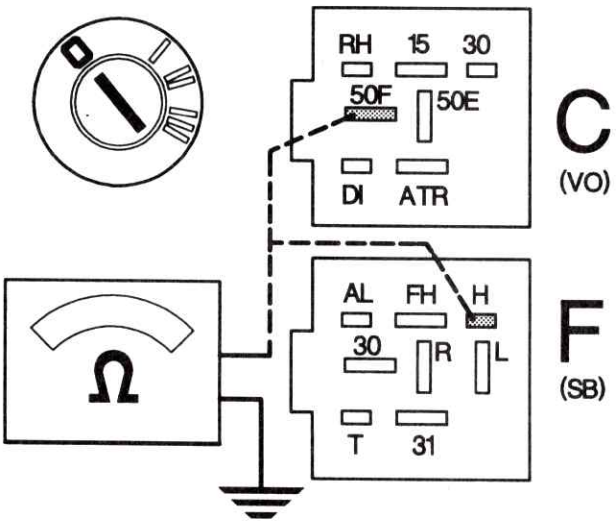

3600406A

Check that item 50F and item H are not shorted to ground.

– Ignition off.

Measurement A:

– First connect an ohmmeter between ground and the alarm relay base item 50F.

The ohmmeter should show approx. 1 ohm:
this is correct and not a sign of shorting.

Measurement B:

– Then connect an ohmmeter between ground and the alarm relay base item H.

The ohmmeter should show approx.1 ohm:
this is correct and not a sign of shorting.

If readings A and B are both correct:

- Proceed to next page.

If there is a deviation:

Measurement A:

There is a short to ground in the lead between item 50F and the starter motor.

Measurement B:

There is a short to ground in the lead between item H and the horn.

- Check connections as per step RA1.
  Rectify the fault or renew the lead.

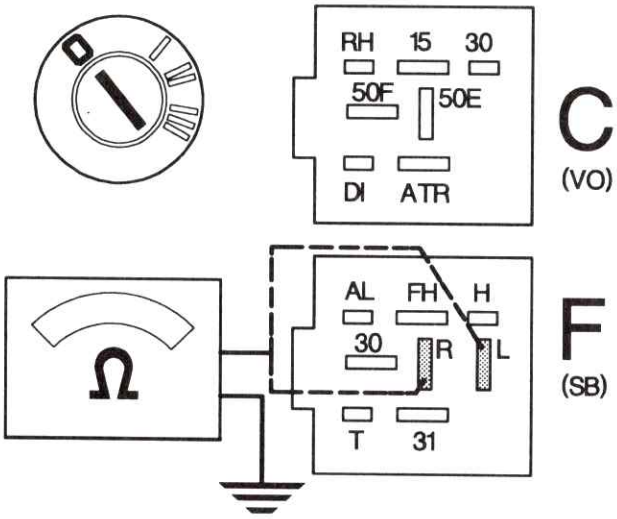

Measurement C:

– First connect an ohmmeter between ground and the alarm relay base item L.

The ohmmeter should show approx 1 ohm: this is correct and not a sign of shorting.

Measurement D:

– Then connect an ohmmeter between ground and the alarm relay base item R.

The ohmmeter should read approx. 1 ohm: this is correct and not a sign of shorting.

If readings C and D are in order:

Basic alarm:

- Check the connection as per step RA1.
  Renew the control module.

Guard Alarm II:

- Continue to step P2.

If the readings deviate:

Measurement C:

There is a short to ground in the lead between item L and the left turn signal.

Measurement D:

There is a short to ground in the lead between item R and the right turn signal.

- Check the connections as per step RA1.
  Rectify the fault or renew the lead.

The following applies only to Guard Alarm II

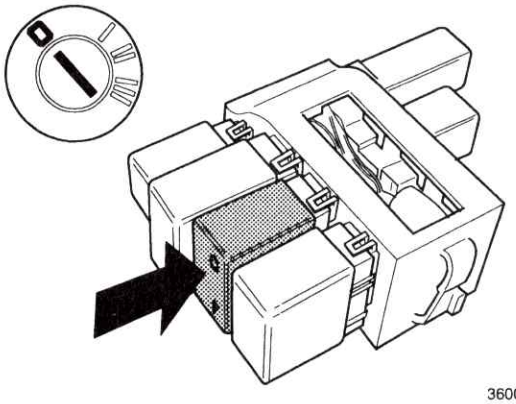

3600435A

P2

Checking Guard Alarm II's accessory wiring

- Ignition off.
- Reconnect the alarm control module (item C/F).

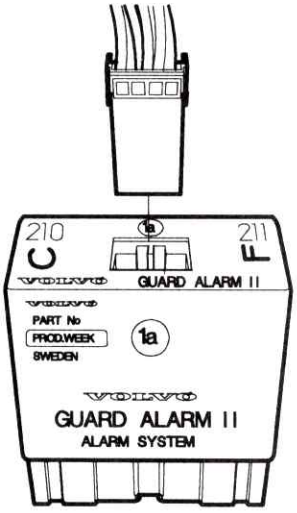

3600460A

- Unplug the connector from the Guard Alarm II control module.

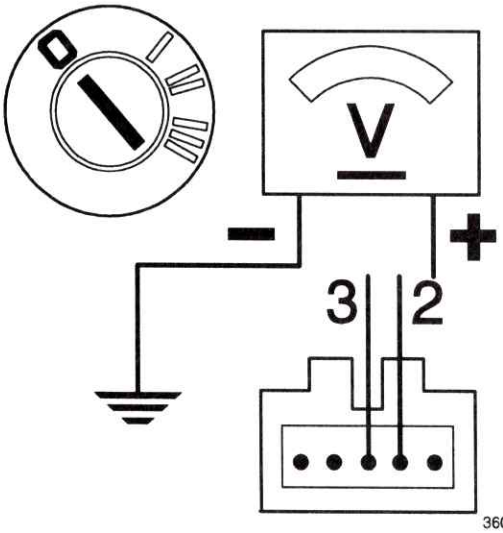

3600462A

Check that the accessory wiring is not shorted to battery supply

- First connect a voltmeter between ground and the 5-pole connector item 2.
- Then connect the voltmeter between ground and the 5-pole connector item 3.

The voltmeter should show 0 V.

If the wiring is in order:

- Check the connections as per step RA1.
  Renew the control module.

Before the module is renewed it should be checked with the aid of the programming box, see step QE.

Q. Programming and testing the control module (only Guard Alarm II)

QA. General

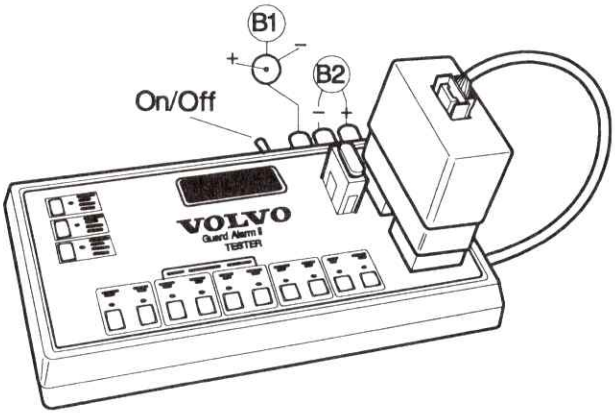

3600482A

Programming box P/N 1399141-9

Connect the programming box to the car or mains unit cigarette lighter socket by means of the accompanying cable (connection B1). The power supply must be capable of delivering at least 800 mA at 12-13.6 V DC. One suitable 220 V mains unit with a cigarette lighter socket is P/N 1363588-3.

A lead with banana plugs is connected to B2. The ground should be connected to the black socket and +12 V to the red socket.

– Set switch to ON.

The red "POWER ON" lamp will light up and the lower line on the display shows "INSERT UNIT!".

– Plug the alarm control module into the base of the programming box.
– Connect the green plug to the top of the control module.

The lower line of the display now shows the current status:

"UNIT IS ARMED"

"UNIT IS DISARMED"

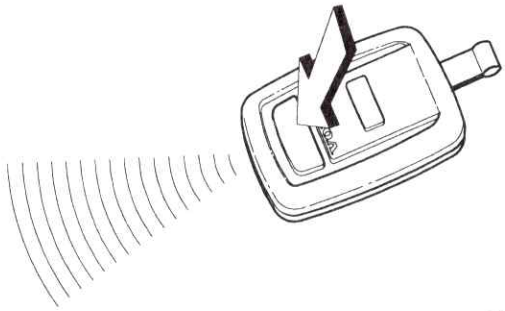

3600316A

To change the status:

– Press button 1 on the remote.

The status of the alarm is irrelevant during programming/testing.

Note:
Always finish in deactivated status before the control module is removed after programming/testing.

QB. Reprogramming the alarm functions

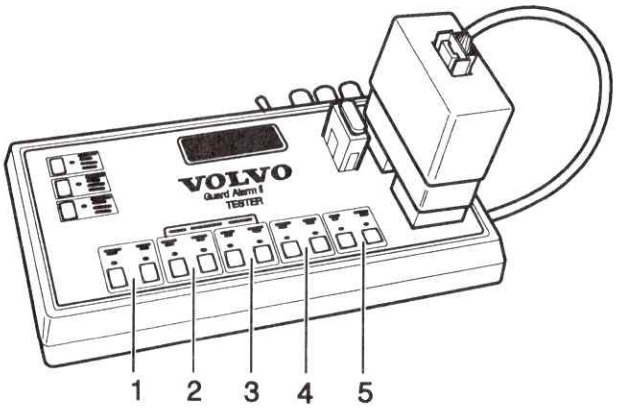

3600483A

Functions 1 to 5

The buttons in the lower row are used to program the alarm functions.

The following five functions can be changed:

1. Reactivation: "Re-Set OFF" / "Re-Set ON"

"Re-set ON" is the pre-programmed setting.
If doors, hood or trunk are not opened within 2 minutes of deactivation, the alarm is reactivated and the car locked.

2. Visual acknowledgement: "Light OFF" / "Light ON"

"Light ON" is the pre-programmed setting.
Upon activation and deactivation, there is a visual signal from the car's turn signals.

3. Sound acknowledgement: "Horn OFF" / "Horn ON"

"Horn OFF" is the pre-programmed setting.
Upon activation and deactivation, there is a sound acknowledgement from the car's horn or siren.

4. Horn signal: "Horn - - - - " / "Horn ——"

" - - - - " = Pulsating sound signal if alarm triggered.

"——" = Continuous sound signal if alarm triggered.

The pulsating sound signal is the pre-programmed setting.

Note: If a siren is fitted the continuous sound signal should be selected.

5. Panic alarm: "Panic OFF" / "Panic ON"

"Panic ON" is the pre-programmed setting.
If button 2 on the remote is held down for 3 seconds the alarm will be triggered in the form of sound and visual signals for 30 seconds.

LEDs located next to function buttons

When the control module is connected the current status of the functions discussed above is shown via the illuminated LEDs above the buttons.

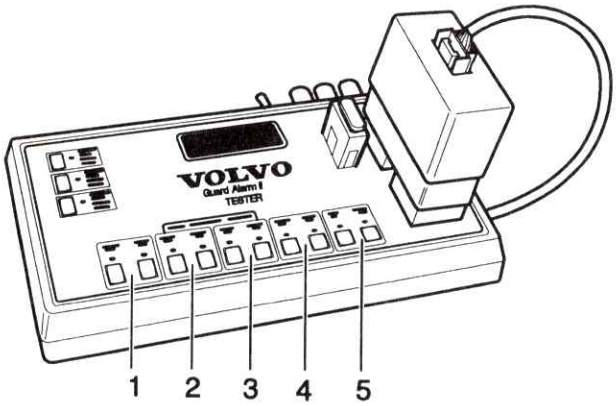

3600483A

Changing the pre-programmed settings

To change the pre-programmed settings:

– Press the relevant function button.

When the LED above the relevant function button lights, programming is complete.

> **Note:**
> Be aware of current legal requirements before re-programming. The legal requirements for each market are given in the alarm instruction manual.

QC. Programming key codes

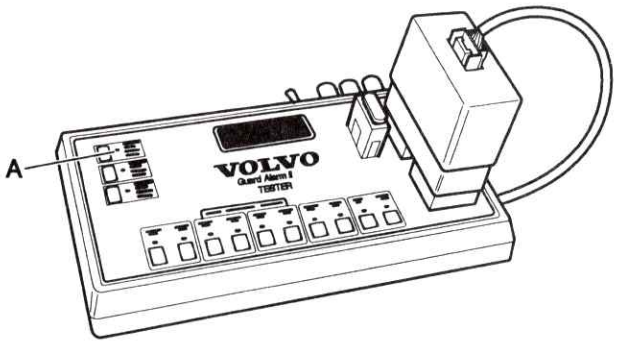

3600484A

Button "Read new KeyCode"

– Press button A "Read new KeyCode".
The display shows "READ NEW KEYCODE"
(PRESS KEY...)

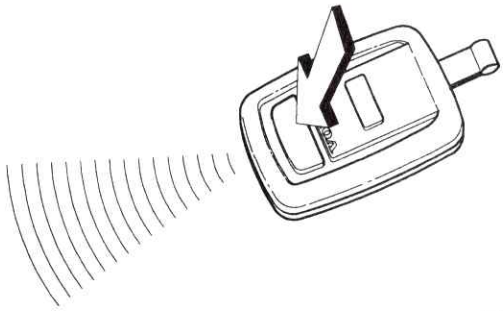

3600316A

– Press one of the buttons on **all** handsets to be programmed.
On the lower row of the display "NEW CODE OK" is shown after each remote has been programmed.

> **Note:**
> All existing key codes are erased when the first handset is programmed.

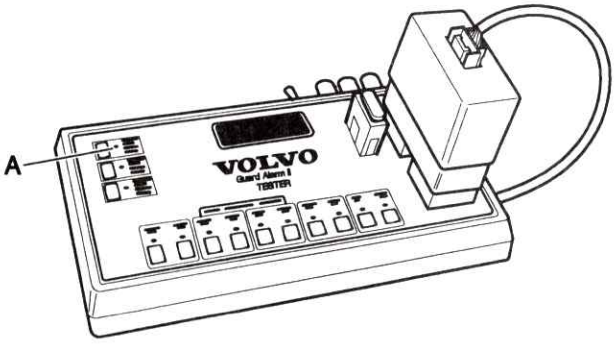

3600484A

– Wait until the red light for button A "Read new KeyCode" goes out.

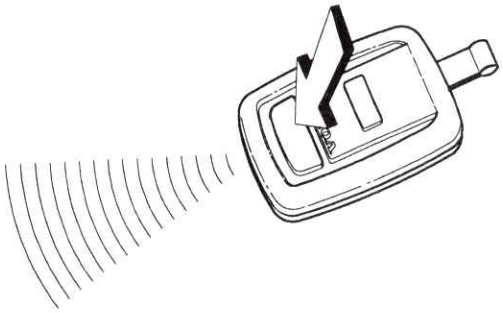

3600316A

– Test **all** handsets which have been programmed.

If any function is missing on any handset, repeat the programming.

QD. Test of the ten most recent alarm causes

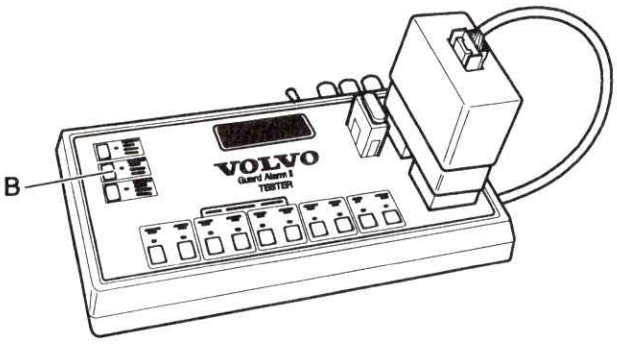

3600485A

Button "Show alarm cause"

The control module stores the 10 most recent alarm causes in memory.

– Press button B "Show alarm cause".
The display shows the order on the upper row with the oldest triggered alarm first with the caption "OLD" and the most recent with the caption "NEW".

Example: "OLD 87654321 NEW"

Code letter for alarm cause

The lower row on the display shows the current alarm cause with a code letter as follows. The ten most recent alarm causes are displayed.

"D" = Door; alarm via signal input door (T)

"H" = Horn; alarm via signal input hood (FH) or trunk (RH)

"S" = Sensor; alarm via signal input sensor (S)

"I" = Ignition; alarm via signal input ignition (15)

Example: "DDSIHHHHSD"

Stored DTCs

Note:
The stored DTCs cannot be erased.

If the current control module is to be installed for continued fault tracing, the order of current DTCs should be listed in order to be able to determine which alarm cause has arisen.

Bear in mind that during quality control of control modules and after the assembly of the alarm on the car, the alarm will be triggered via the different alarm inputs. These are also stored in memory.

QE. Self test of control module

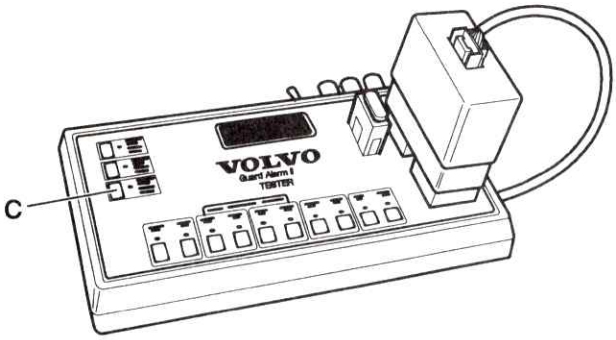

3600486A

Button "Run self test"

– Press button C "Run self test".
The lower row on the display shows the caption "TESTING..."

If the module is OK:

If the control module is free of faults, the caption "TEST OK!" appears on the lower row of the display.

If the control module is faulty:

If the control module is faulty the caption "ERRCODE XXX" is shown ("XXX" is a 3-digit DTC).

The DTC (ERRCODE) should always be quoted when making claims for a faulty module.

R. Other electric fault tracing

RA. Checking leads and connection

Many faults in the electrical system are the result of faults in the leads and connections. These faults arise most often through interference from electrical systems or from mechanical or chemical effects.

When incidental faults occur, they are often in leads or connections. Check as suggested below.

Approach

- Check connections visually.
- Check resistances of contacts and leads.
- Check for open circuit.
- Check for shorts to ground.
- Check shorting between leads.
- With incidental faults, measure the resistance of contacts and leads.

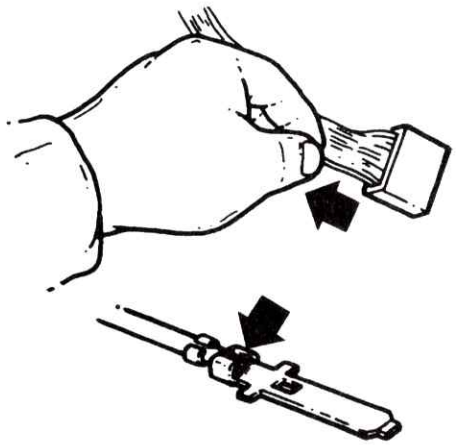

S150716

RA1

Check connections visually

When carrying out measurements and tests, carry out a visual check where connectors are undone.

Checks:

- Look for corrosion which may affect the contact in the connections.
- See that the connecting pins are intact and that the copper wires are well connected to the pins.

RA2

Resistance in leads, contacts and connections

The resistance of leads, contacts and connections should actually be 0 ohms, but a certain resistance is always present as a result of poor assembly of leads, corrosion on connectors and wear and tear. If resistance becomes too large, functional disturbances will arise.

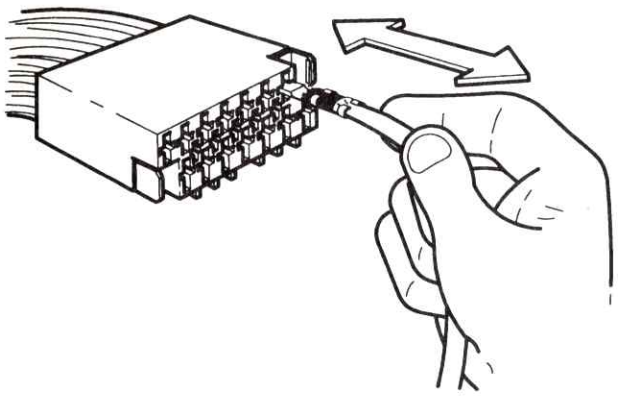

3000098A

Checking intermittent faults

- Shake leads gently and pull gently on connections while measuring in order to locate intermittent faults.
- Test with a spare pin that a socket is making good contact and that the socket remains in place if you pull gently on the pin.

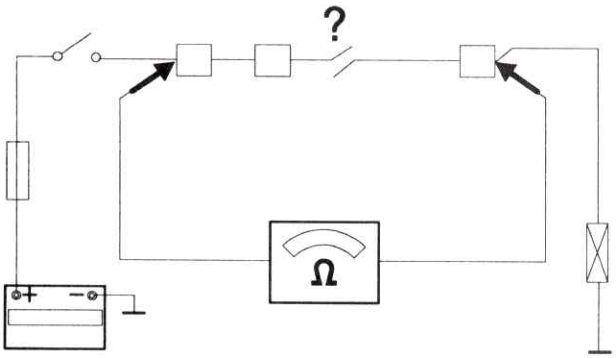

5900138A

Measuring with an ohmmeter

- Ignition off.
- Remove battery negative lead.
- Take measurements with the ohmmeter between the ends of the lead.

Before commencing measurement, check that the ohmmeter shows 0 ohms when the probes are shorted together. Shake the lead gently and observe the reading on the meter.

The ohmmeter should not show more than a few ohms in a circuit with an acceptable standard of contacts and connectors.

RA3

Breaks in the circuit

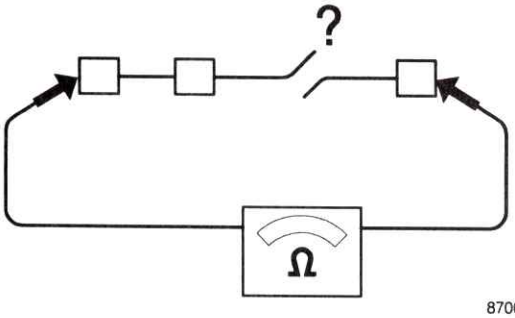

8700264A

Breaks in the circuit are revealed when some function fails to work. Chafed and worn leads, together with connections that have worked loose, are the most common reasons for faults.

Check:

- Ignition off.
- Disconnect negative lead from battery.
- Remove contacts from both ends of the lead.
- Measure between the ends of the lead with an ohmmeter.

The ohmmeter should show 0 ohms when a lead has no break.

RA4

Shorting to ground

A short between a live lead in a circuit and ground is revealed most often by a fuse blowing when the lead becomes live or by a failure in some function.

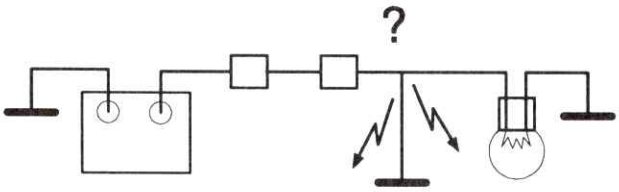

8700265A

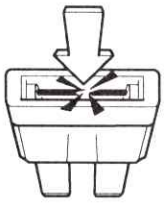

3000097A

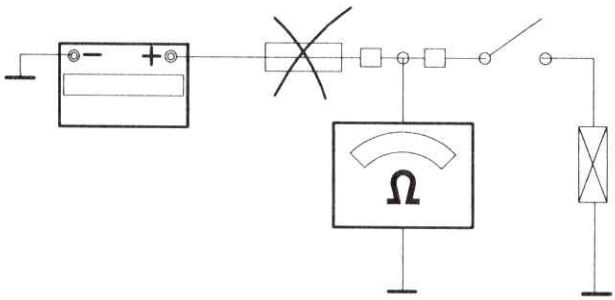

5900071A

Checking for short circuit with an ohmmeter

- Ignition off.
- Disconnect the battery negative lead.
- Remove any blown fuse.
- Remove any connected components.
- Connect an ohmmeter between ground and the lead to be tested.

If the meter shows infinite resistance when no components are connected, there is no short.

If the meter shows low resistance, about 0 ohms, the lead is shorted to ground.

RA5

Shorting between leads

A short between leads does not always lead to a blown fuse. The fault is most often revealed by some function not working.

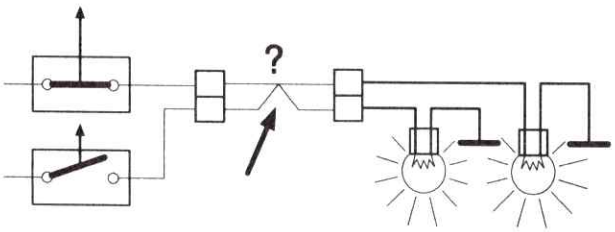

8700266A

Check:

- Ignition off.
- Disconnect the battery negative lead.
- Measure between the suspect leads with an ohmmeter to see if there is a short.

The ohmmeter should read infinite resistance when measuring between leads which are not linked to each other in the circuit.

RA6

Contact resistance, corrosion

Resistance in contacts, leads and connections should actually be 0 ohms. However there is always some resistance as a result of corrosion in the leads and also wear and tear.

If the resistance becomes too high, interference will arise in the function. The extent of resistance before interference is caused varies with the load on the circuit. As a rough guide, it should be a few ohms.

Checks

– Check connections visually as per RA1.

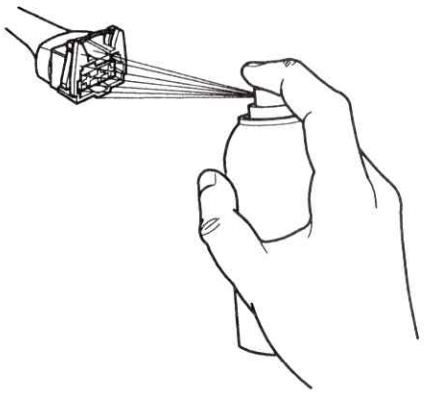

3700004A

Cleaning pins and sockets

> **Note:**
> Rust-dissolving spray or grease must not be used on any of the oxygen sensor contacts.

– Disconnect the battery negative lead.
Spray rust solvent 1161034-2 on the disconnected contacts.
– Blow dry with compressed air.

Greasing sockets

> **Note:**
> Do not fill the protective covers with grease.

– Squeeze grease 1161417-9 into the sockets straight from the tube.
– Check that the openings are filled in all sockets.
– Test with a spare pin that the socket is making good contact and that the socket remains in place if you pull gently on the pin.

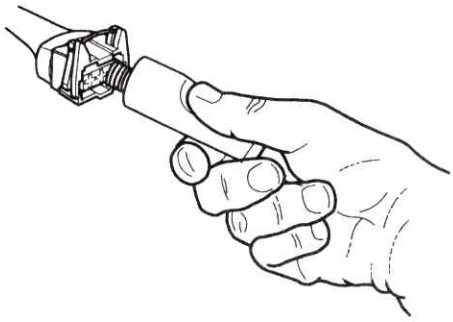

3700006A

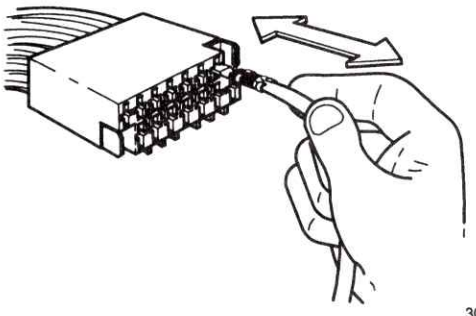

3000098A

Accessory wiring Volvo Guard Alarm II

To be connected to wiring run 940 1993- and 960 1993-1994

Component list

31/2	Front left wing grounding point
D2	Alarm connector, 8-pole at steering column
D3	Alarm connector, 4-pole at steering column
D4	Alarm connector, 2-pole in engine compartment, front left
DD1	Start inhibitor connector, 2-pole
DD2	Connector alarm control module top side, 5-pole
DD3	Connector indicator LED, 2-pole
DD4	Connector sensor, 4-pole
DD10	Alarm indicator LED
DD11	Fuse alarm horn output (separate fuse fitted to alarm harness)
DD13	Magnetic switch hood
DD16	Horn anti-theft alarm

The circuit diagram for the accessory wiring is in addition to the three circuit diagrams describing the wiring run.

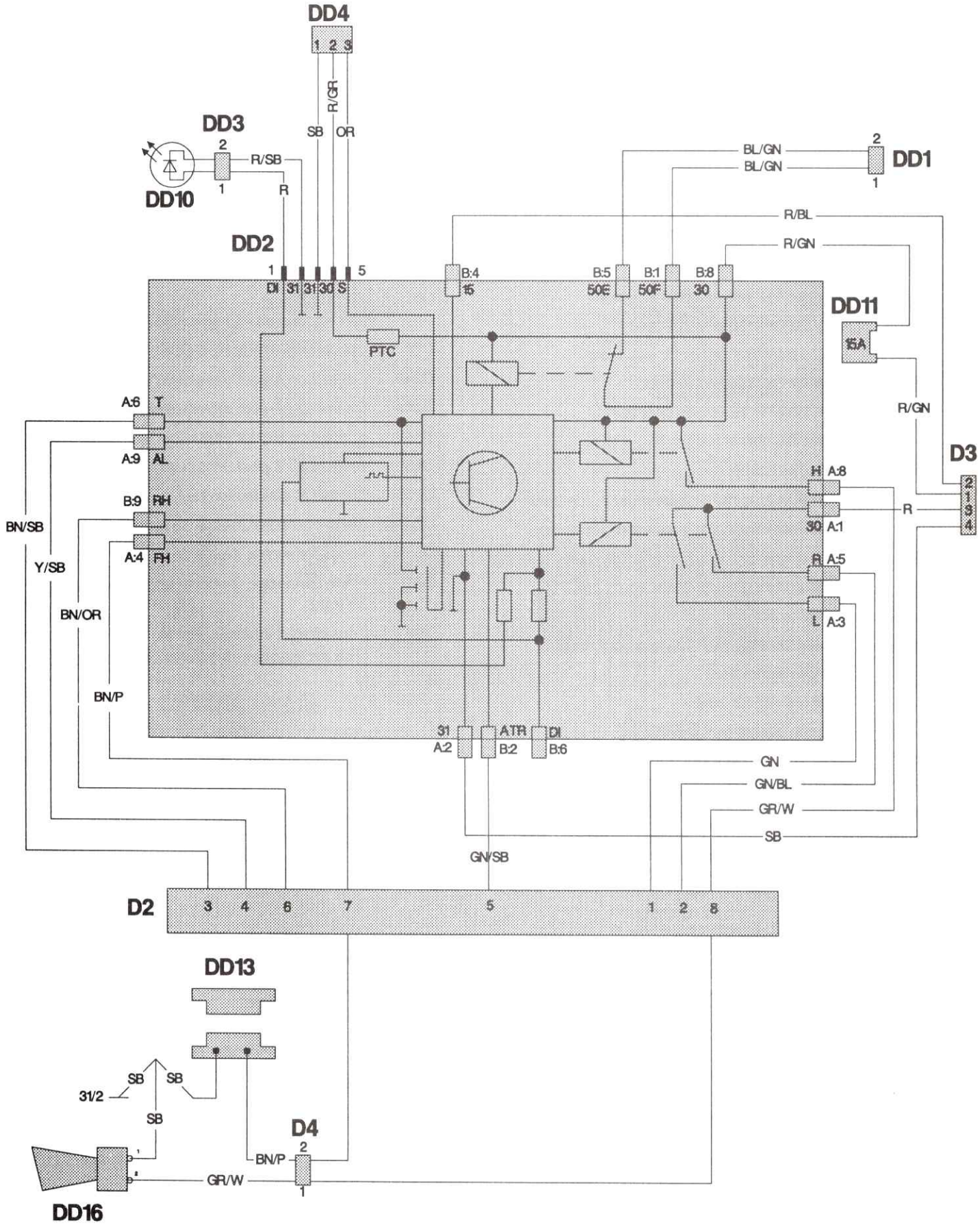
DD4
1 2 3
R/GR
SB
OR
DD3
2
R/SB
1
R
DD10
DD2
1
5
DI 31 31 30 S
B:4
15
B:5
50E
B:1
50F
B:8
30
BL/GN
BL/GN
2
1
DD1
R/BL
R/GN
DD11
15A
R/GN
PTC
A:6 T
A:9 AL
B:9 FH
A:4 FH
BN/SB
Y/SB
BN/OR
BN/P
H A:8
R
30 A:1
R A:5
L A:3
D3
2
1
3
4
31
A:2
ATR
B:2
DI
B:6
GN
GN/BL
GR/W
SB
GN/SB
D2
3 4 6 7 5 1 2 8
DD13
SB
SB
31/2
SB
D4
2
BN/P
GR/W
1
DD16

3600492A

Wiring run for anti-theft alarm 940 1993-

Component list

1/1	Battery
2/7	Central locking relay
3/1	Ignition lock
3/5	Selector switch turn signals/main and dipped beam
3/14	Switch locking button
3/31	Door contact driver's door
3/32	Door contact passenger's side front
3/33	Door contact driver's side rear
3/34	Door contact passenger's side rear
3/35	Door contact tailgate (5-door)
3/40	Start inhibitor automatic gearbox
3/78	Lock assembly trunk
5/1	Instrument panel
6/5	Central locking motor passenger's side front
6/6	Central locking motor passenger's side rear
6/7	Central locking motor driver's side rear
6/8	Central locking motor trunk
6/25	Starter motor
6/36	Central locking motor driver's side front
10/13	Left turn signal front
10/14	Right turn signal front
10/15	Left side blinker (not USA/CDN)
10/16	Right side blinker (not USA/CDN)
10/24	Trunk light
10/25	Tailgate light (5-door)
10/47	Right turn signal lamp rear
10/54	Left turn signal lamp rear
11/1-26	Fuses
15/1	Positive terminal
15/9	Fused 15 point busbar in distribution box
31/1	Grounding point right wing front
31/2	Grounding point left wing front
31/10	Grounding point right A-post
31/11	Grounding point left rear light
31/12	Grounding point right rear light
31/13	Grounding point in trunk
31/31	Grounding busbar in distribution box
C1	Connector 53-pole Instrument panel harness - Floor pan harness
C2	Contact 53-pole Instrument panel harness - Left wheel arch harness
C3	Connector 53-pole Instrument panel harness - Right wheel arch harness
C23	Contact for tailgate, 2-pole (5-door)
C51	Contact 8-pole Left wheel arch - Engine harness
C79	Contact driver's door, 4-pole
C143	Contact on A-post passenger's side, 24-pole
C144	Contact on A-post driver's side, 24-pole
C149	Contact on B-post passenger's side, 11-pole
C150	Contact on B-post driver's side, 11-pole
C166	Contact at distribution box, 8-pole
D2	Alarm connector, 8-pole on steering column
D3	Alarm connector, 4-pole on steering column
D4	Alarm connector, 2-pole in engine compartment, left front
DD1	Contact start inhibitor, 2-pole. (See accessory wiring Volvo Guard Alarm II)

Wiring run for anti-theft alarm 940 1993-

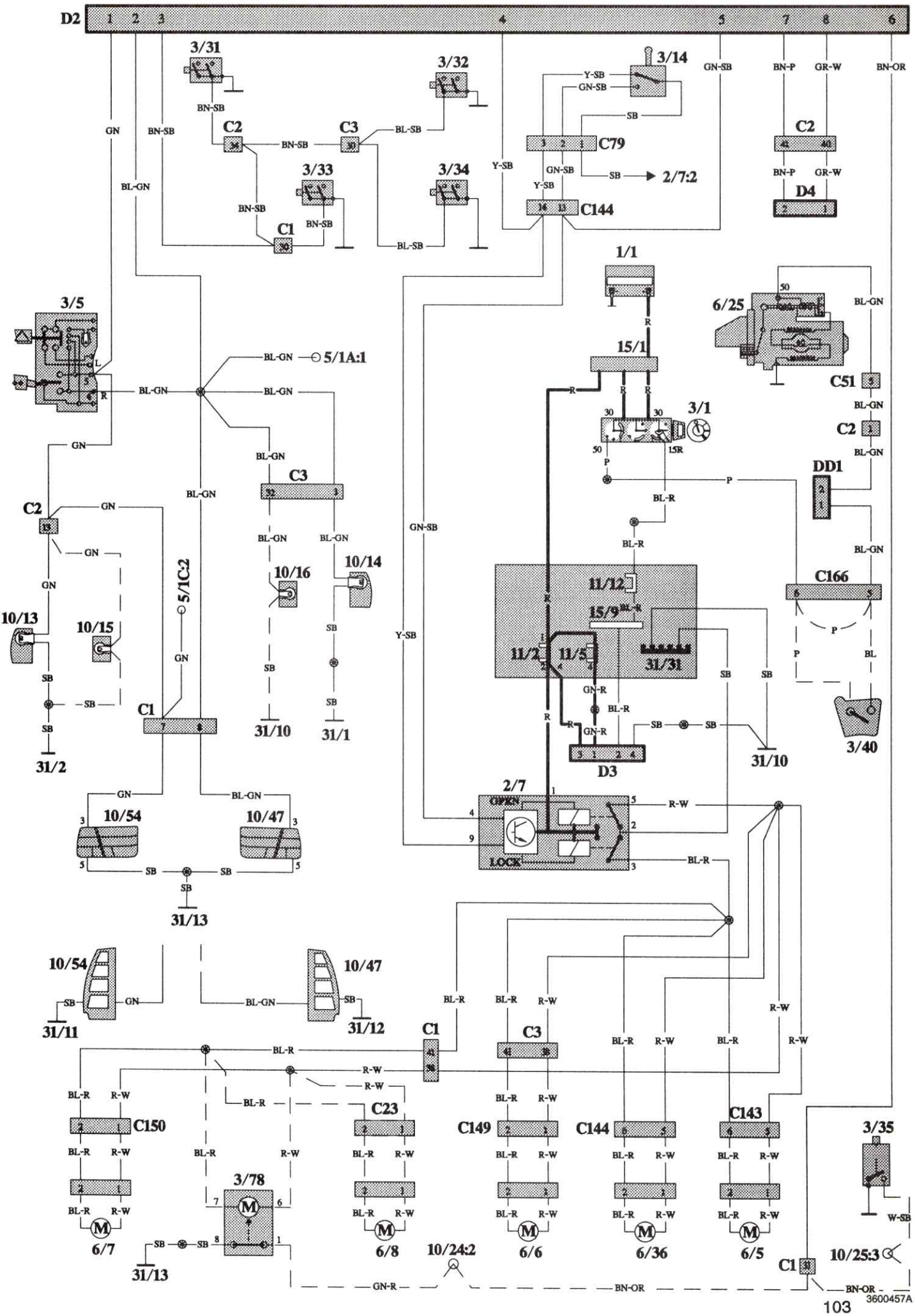

Wiring run for anti-theft alarm 960 1993

Component list

1/1	Battery
2/7	Central locking relay
3/1	Ignition lock
3/14	Switch locking button
3/31	Door contact driver's door
3/32	Door contact passenger's side front
3/33	Door contact driver's side back
3/34	Door contact passenger's side back
3/78	Lock assembly trunk
5/1	Instrument panel
6/5	Central locking motor passenger's side front
6/6	Central locking motor passenger's side back
6/7	Central locking motor driver's side back
6/8	Central locking motor trunk
6/36	Central locking motor driver's side front
10/13	Left turn signal front
10/14	Right turn signal front
10/15	Left side blinker (not USA/CDN)
10/16	Right side blinker (not USA/CDN)
10/17	Right tail light
10/18	Left tail light
10/25	Tailgate light (5-door)
10/47	Right turn signal lamp rear
10/54	Left turn signal lamp rear
11/1-35	Fuses
15/1	Positive terminal
15/3	30 point busbar in fusebox
31/1	Grounding point right wing front
31/2	Grounding point left wing front
31/6	Grounding point left A-post
31/10	Grounding point right A-post
31/11	Grounding point left rear light
31/12	Grounding point right rear light
31/13	Grounding point in trunk
31/14	Grounding point at distribution box
31/31	Grounding busbar in distribution box
C1	Connector 53-pole Instrument panel harness - Floor pan harness
C2	Contact 53-pole Instrument panel harness - Left wheel arch harness
C3	Connector 53-pole Instrument panel harness - Right wheel arch harness
C13	Connector at relay distribution box, 4-pole
C21	Connector at tailgate, 4-pole
C23	Contact for tailgate, 2-pole (5-door)
C143	Contact on A-post passenger's side, 24-pole
C144	Contact on A-post driver's side, 24-pole
C149	Contact on B-post passenger's side, 11-pole
C150	Contact on B-post driver's side 11-pole
D2	Alarm connector, 8-pole on steering column
D3	Alarm connector, 4-pole on steering column
D4	Alarm connector, 2-pole in engine compartment left front
DD1	Contact start inhibitor, 2-pole. (See accessory wiring Volvo Guard Alarm II)

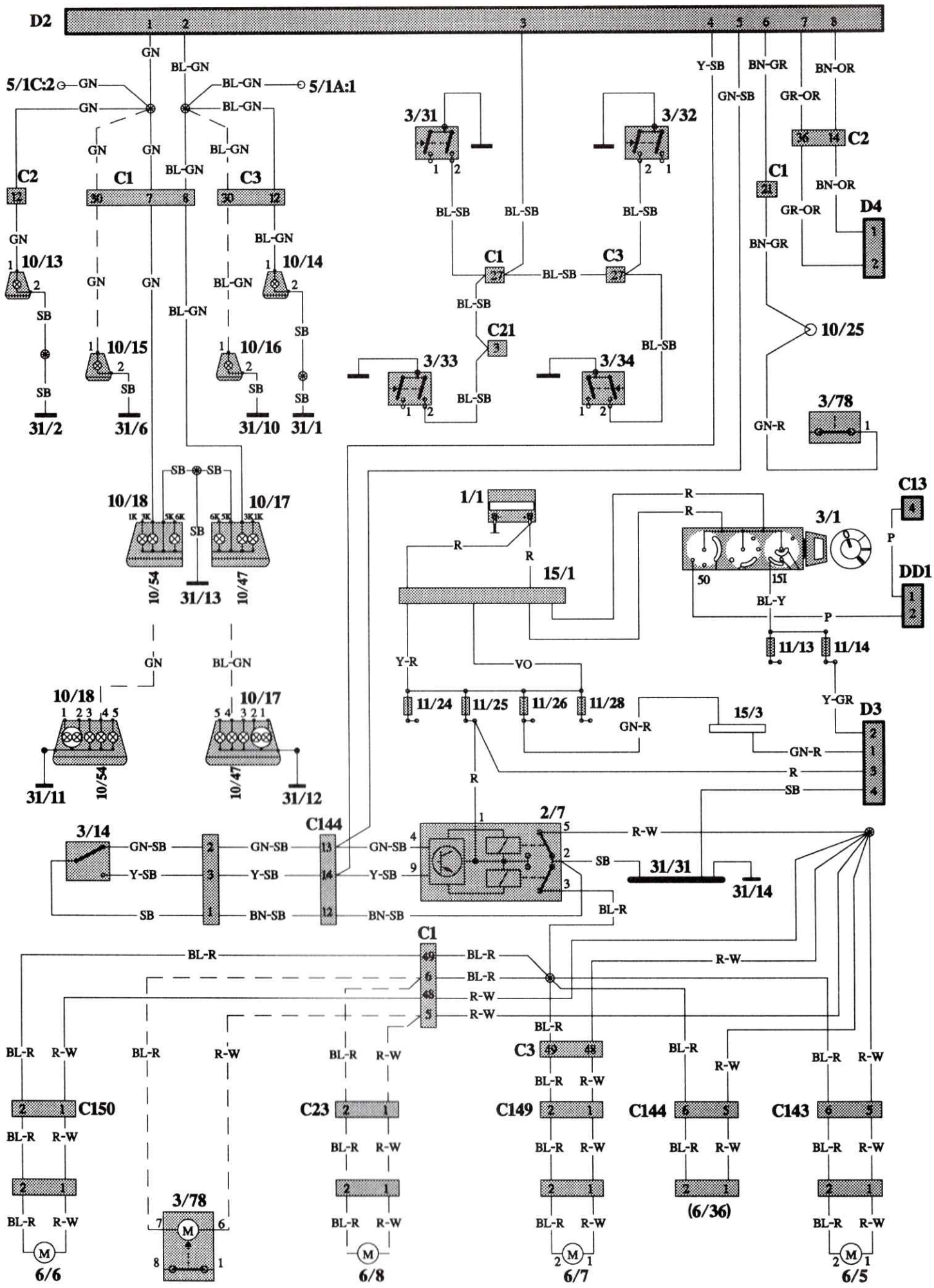
D2
5/1C:2
5/1A:1
GN
BL-GN
C2
C1
C3
10/13
10/14
10/15
10/16
SB
31/2
31/6
31/10
31/1
3/31
3/32
3/33
3/34
BL-SB
C21
Y-SB
BN-GR
BN-OR
GN-SB
GR-OR
D4
10/25
3/78
GN-R
10/18
10/17
10/54
10/47
31/13
1/1
R
15/1
3/1
C13
P
DD1
BL-Y
11/13
11/14
Y-R
VO
11/24
11/25
11/26
11/28
15/3
Y-GR
D3
31/11
31/12
3/14
C144
2/7
R-W
31/31
31/14
BN-SB
BL-R
C150
C23
C149
C143
(6/36)
6/6
6/8
6/7
6/5

3600488A

Wiring run for anti-theft alarm 960 1994

Component list

1/1	Battery
2/7	Central locking relay
3/1	Ignition lock
3/14	Switch locking button
3/31	Door contact driver's door
3/32	Door contact passenger's side front
3/33	Door contact driver's side back
3/34	Door contact passenger's side back
3/78	Lock assembly trunk
5/1	Instrument panel
6/5	Central locking motor passenger's side front
6/6	Central locking motor passenger's side back
6/7	Central locking motor driver's side back
6/8	Central locking motor trunk
6/36	Central locking motor driver's side front
10/13	Left turn signal front
10/14	Right turn signal indicator front
10/15	Left side blinker (not USA/CDN)
10/16	Right side blinker (not USA/CDN)
10/17	Right tail light
10/18	Left tail light
10/24	Trunk light
10/25	Tailgate light (5-door)
10/47	Right turn signal lamp rear
10/54	Left turn signal lamp rear
11/1-35	Fuses
15/1	Positive terminal
15/3	30 point busbar in fusebox
31/1	Grounding point right wing front
31/2	Grounding point left wing front
31/6	Grounding point left A-post
31/10	Grounding point right A-post
31/11	Grounding point left rear light
31/12	Grounding point right rear light
31/13	Grounding point in trunk
31/14	Grounding point at distribution box
31/31	Grounding busbar in distribution box
C1	Connector 53-pole Instrument panel harness - Bottom harness
C2	Contact 53-pole Instrument panel harness - Left wheel arch harness
C3	Connector 53-pole Instrument panel harness - Right wheel arch harness
C21	Connector left B-post, 6-pole
C23	Connector for tailgate, 2-pole (5-door)
C143	Connector on A-post passenger's side, 24-pole
C144	Connector on A-post driver's side, 24-pole
C149	Connector on B-post passenger's side, 11-pole
C150	Connector on B-post driver's side 11-pole
C166	Connector at relay distribution box, 8-pole
D2	Alarm connector, 8-pole on steering column
D3	Alarm connector, 4-pole on steering column
D4	Alarm connector, 2-pole in engine compartment left front
DD1	Contact start inhibitor, 2-pole. (See accessory wiring Volvo Guard Alarm II)

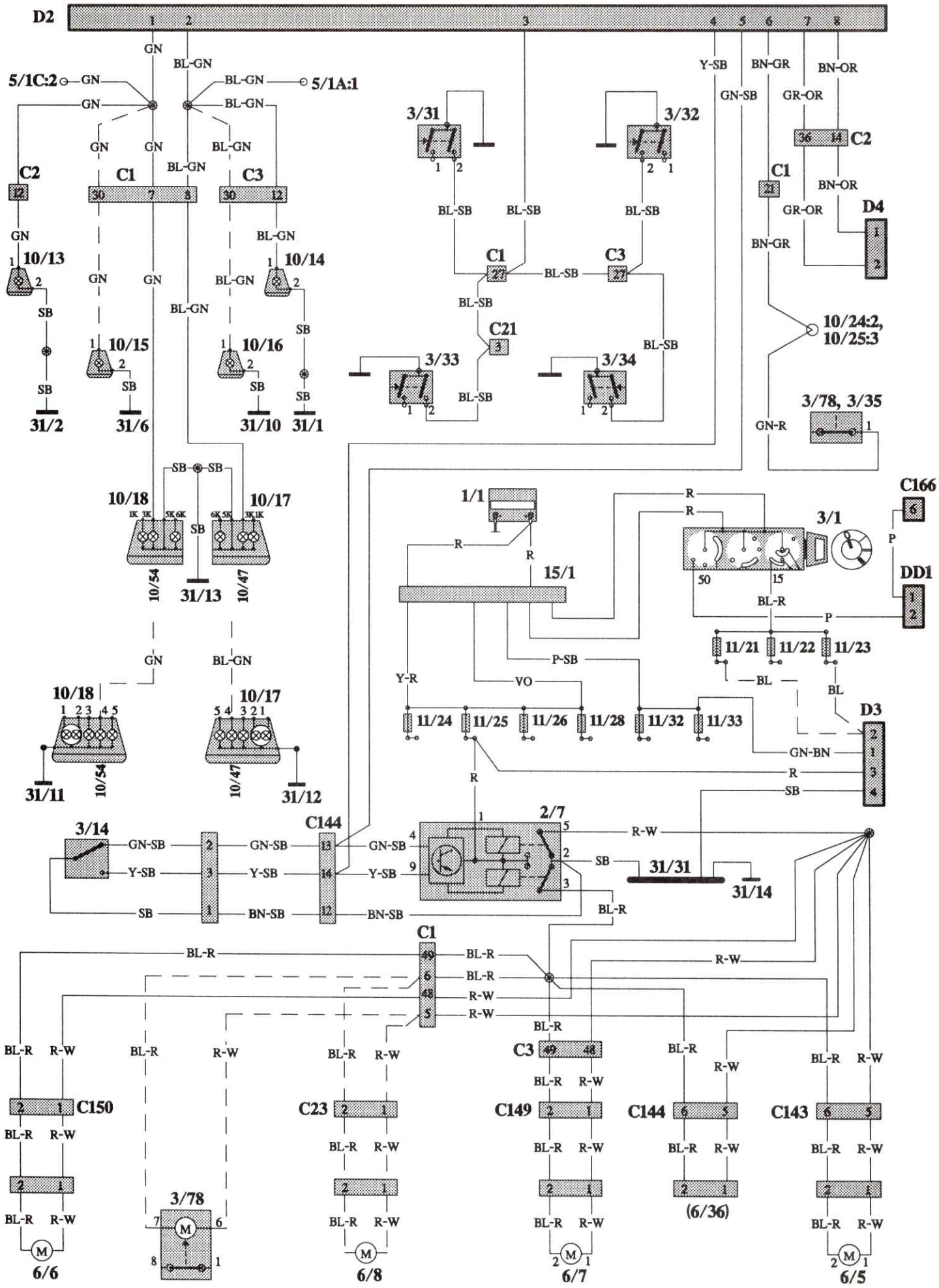
D2
5/1C:2
5/1A:1
GN
BL-GN
C1
C2
C3
10/13
10/14
10/15
10/16
31/2
31/6
31/10
31/1
3/31
3/32
3/33
3/34
C21
BL-SB
Y-SB
BN-GR
BN-OR
GR-OR
GN-SB
D4
10/24:2,
10/25:3
3/78, 3/35
GN-R
SB
10/18
10/17
10/54
10/47
31/13
31/11
31/12
1/1
15/1
3/1
C166
DD1
R
P
BL-R
11/21
11/22
11/23
P-SB
VO
Y-R
BL
11/24
11/25
11/26
11/28
11/32
11/33
D3
GN-BN
3/14
C144
2/7
R-W
31/31
31/14
BN-SB
C150
C23
C149
C143
3/78
6/6
6/8
6/7
6/5
(6/36)

3600456A

Component list

1/1	Battery
2/7	Central locking relay
2/28	Alarm relay
2/35	Relay starter motor 50
3/1	Ignition lock
3/3	Selector for turn signals/high and low beam
3/35	Tailgate contact (5-door)
3/62	Electrical contact hood
3/78	Trunk lock
4/6	Control module ECC
4/16	Control module ABS
4/19	Control module remote central locking
7/68	Solar sensor MCC
10/24	Trunk light
10/25	Tailgate light (5-door)
11A/1-8	Main fuses at battery
11C/1-24	Fuses interior fusebox
16/19	Horn alarm
31/3	Grounding point body
31/4	Grounding point engine
31/6	Grounding point left seat raiser
31/10	Grounding point right seat raiser
34/18	12-pole contact: grounding point interior relay distribution box
34/19	12/22-pole connector: grounding/junction point near handbrake console
A1	Multiplug left A-post
A4	2-pole connector left A-post LM engine compartment - LM interior (white)
A11	6-pole connector LM interior - LM heater
A14	15-pole connector LM ABS - LM interior
A15	12-pole connector LM interior - LM trunk
A16	24-pole connector LM interior - LM trunk
DD2	Connector top side of alarm control module, 5-pole
DD3	Connector indicator LED, 2-pole
DD4	Connector sensor, 4-pole
DD10	Indicator LED alarm

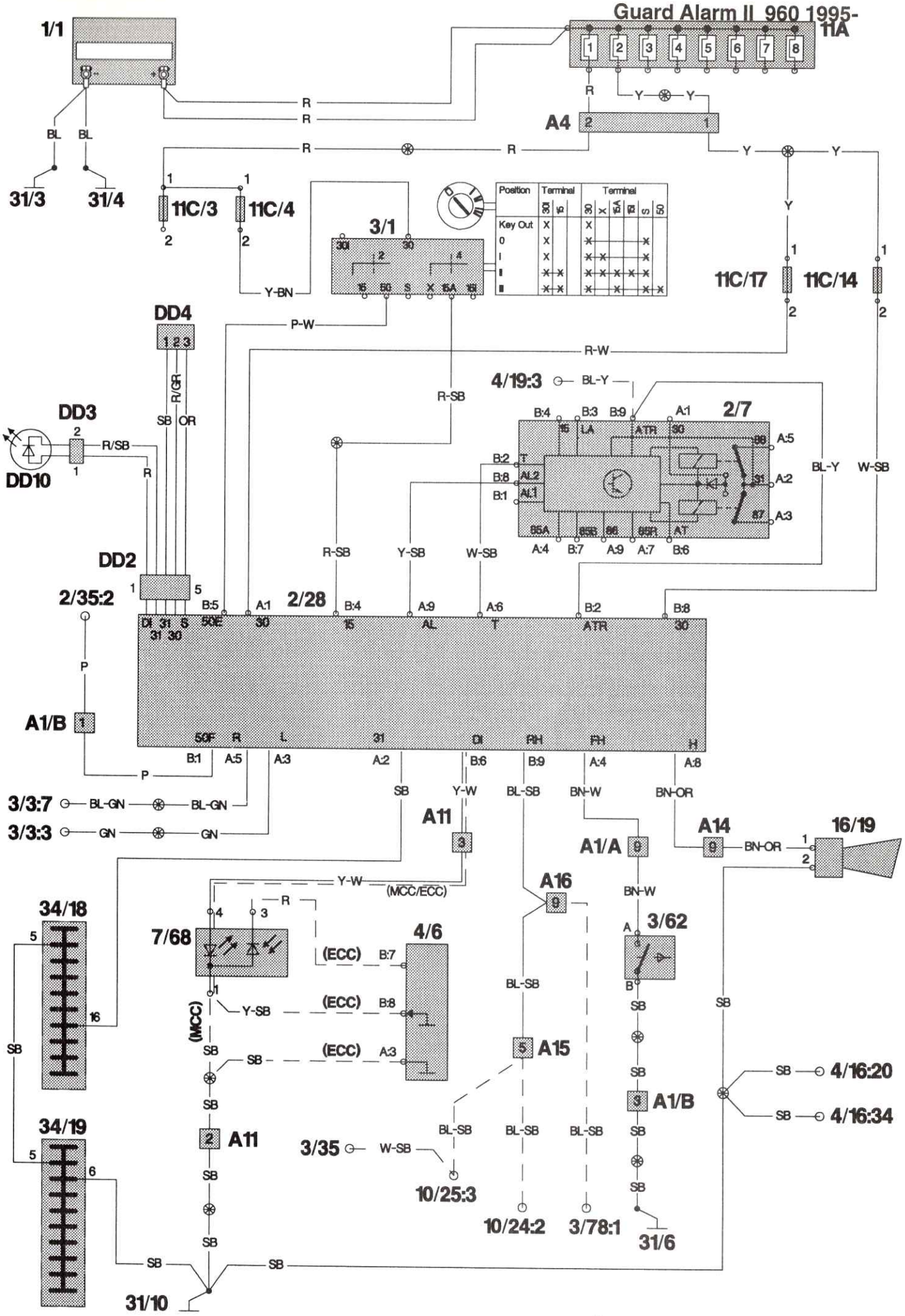
1/1
11A
A4
31/3
31/4
11C/3
11C/4
3/1
Position
Terminal
Key Out
11C/17
11C/14
DD4
DD3
DD10
DD2
2/7
4/19:3
2/35:2
2/28
A1/B
3/3:7
3/3:3
A11
A14
16/19
A1/A
A16
34/18
7/68
4/6
3/62
A15
34/19
3/35
10/25:3
10/24:2
3/78:1
31/6
31/10
4/16:20
4/16:34
(MCC/ECC)
(MCC)
(ECC)

Component list

1/1	Battery
2/7	Central locking relay
2/28	Alarm relay
2/35	Relay starter motor 50
3/1	Ignition lock
3/3	Selector for turn signals/high and low beam
3/35	Tailgate contact (5-door)
3/62	Electrical contact hood
3/78	Trunk lock
4/6	Control module ECC
4/16	Control module ABS
4/19	Control module remote central locking
7/68	Solar sensor MCC
10/24	Trunk light
10/25	Tailgate light (5-door)
11A/1-8	Main fuses at battery
11C/1-24	Fuses interior fusebox
16/19	Horn alarm
31/3	Grounding point body
31/4	Grounding point engine
31/6	Grounding point left seat raiser
31/10	Grounding point right seat raiser
34/18	12-pole contact: grounding point interior relay distribution box
34/19	12/22-pole connector: grounding/junction point near handbrake console
A1	Multiplug left A-post
A4	2-pole connector left A-post LM engine compartment - LM interior (white)
A11	6-pole connector LM interior - LM heater
A14	15-pole connector LM ABS - LM interior
A15	12-pole connector LM interior - LM trunk
A16	24-pole connector LM interior - LM trunk

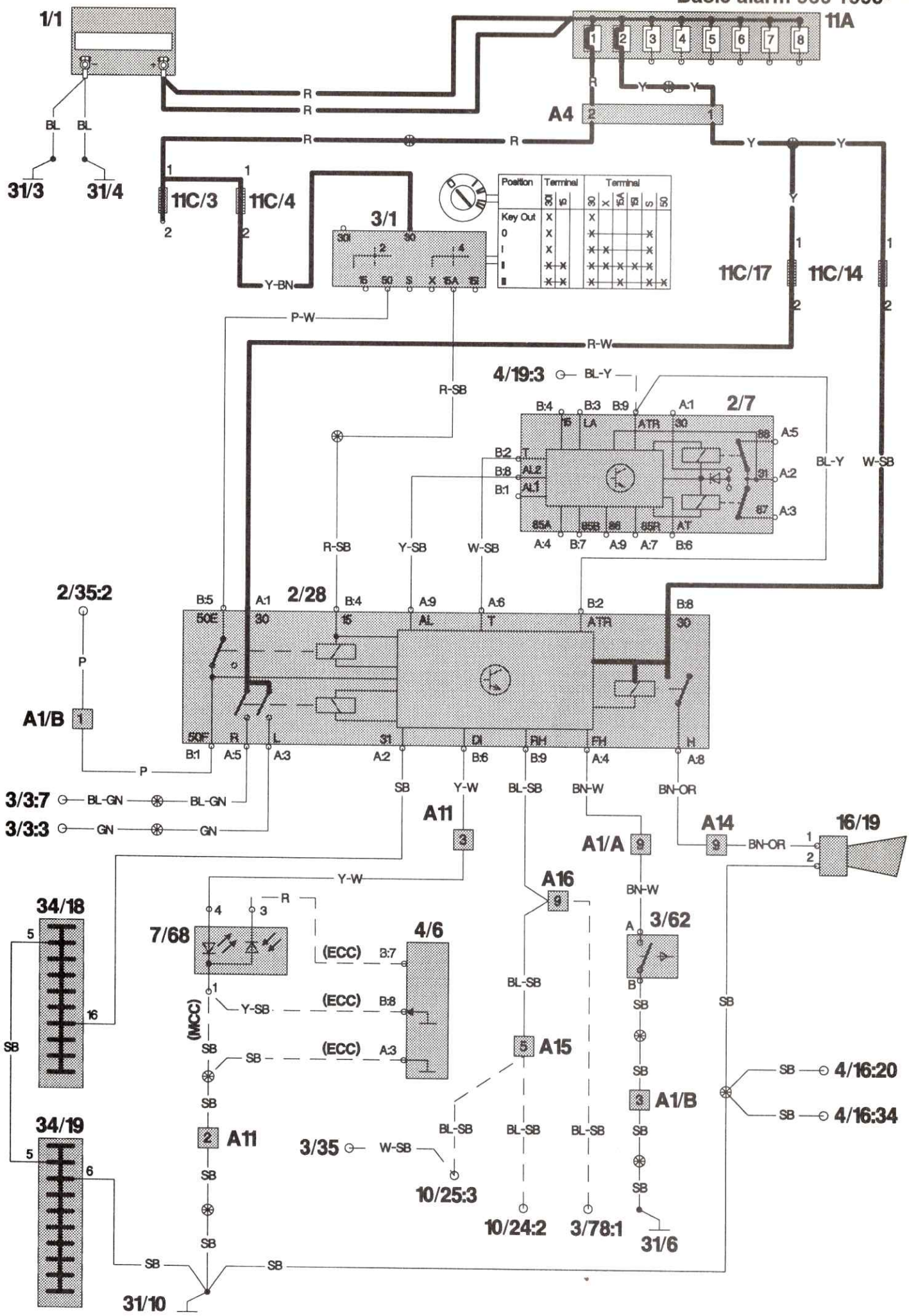
1/1
11A
A4
31/3
31/4
11C/3
11C/4
3/1
Position
Terminal
Key Out
11C/17
11C/14
P-W
R-W
R-SB
4/19:3
BL-Y
2/7
W-SB
Y-SB
2/35:2
2/28
A1/B
3/3:7
BL-GN
3/3:3
GN
A11
A1/A
A14
16/19
BN-OR
A16
34/18
7/68
4/6
(ECC)
(MCC)
3/62
A15
4/16:20
4/16:34
34/19
3/35
W-SB
10/25:3
10/24:2
3/78:1
31/6
31/10

Comments

To
VOLVO CAR CORPORATION
Aftersales
Dept. 57920 PVÖP32
S-405 08 GÖTEBORG

Telefax +46 31 59 23 53

From
.....
.....
.....

Publication:.....
.....

Section:..... Page..... TP No.....

Suggestion/Reason:

.....
.....
.....
.....
.....
.....
.....

Date.....
.....

If you have any suggestions or comments about this manual make a copy of this page, write down your comments and send to us.

TP 3601201
2000.07.94
UK/NA English

Printed in Sweden by Swedprint-Grox, Surte 94.25587